REV	DATE	DESCRIPTION	APPROVED

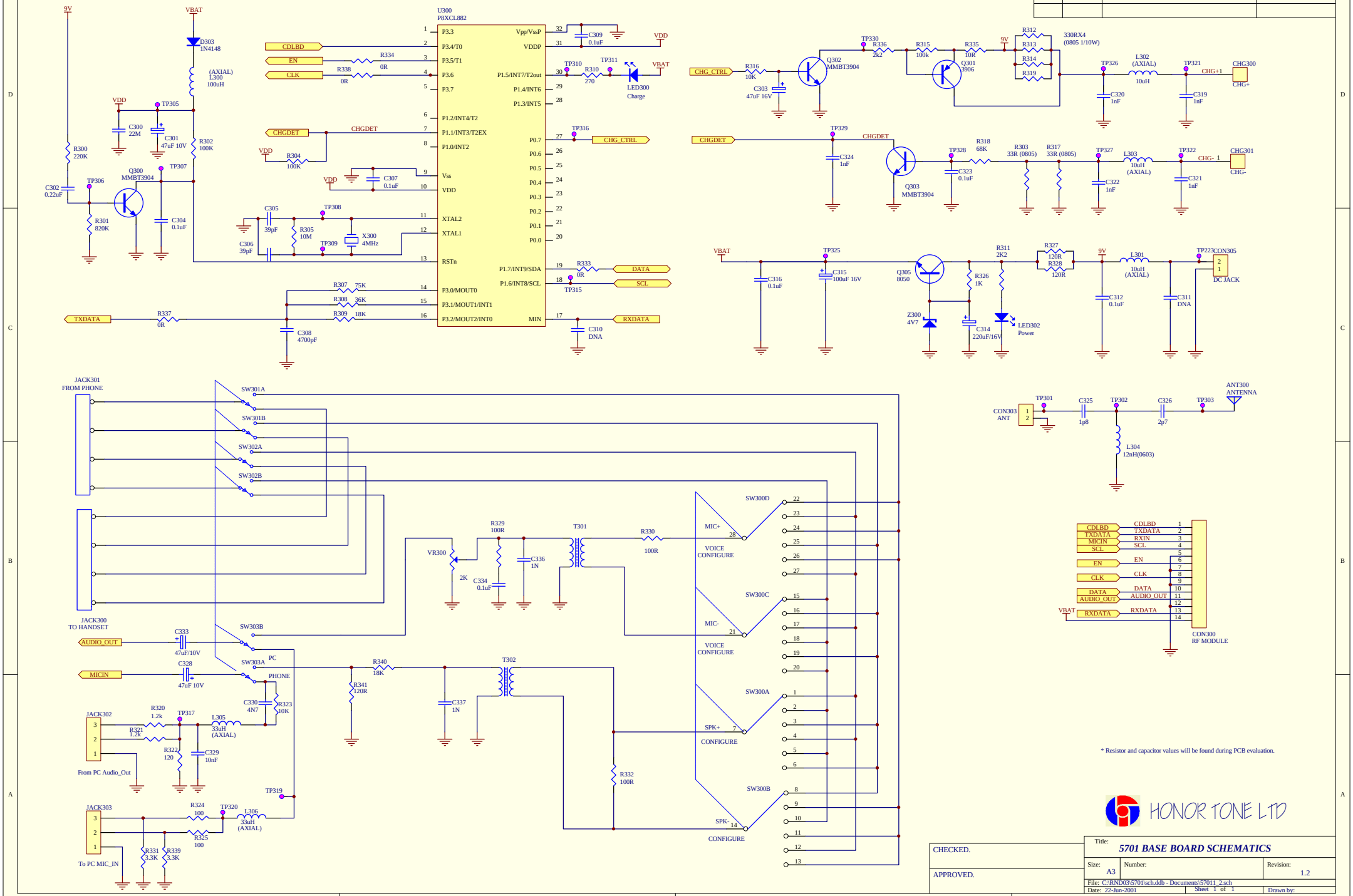

* Resistor and capacitor values will be found during PCB evaluation.

HONOR TONE LTD

CHECKED.

APPROVED.

Title: **5701 BASE BOARD SCHEMATICS**

Size: A3 | Number: | Revision: 1.2

File: C:\RND03\5701\sch.ddb - Documents\57011_2.sch

Date: 22-Jun-2001 | Sheet 1 of 1 | Drawn by:

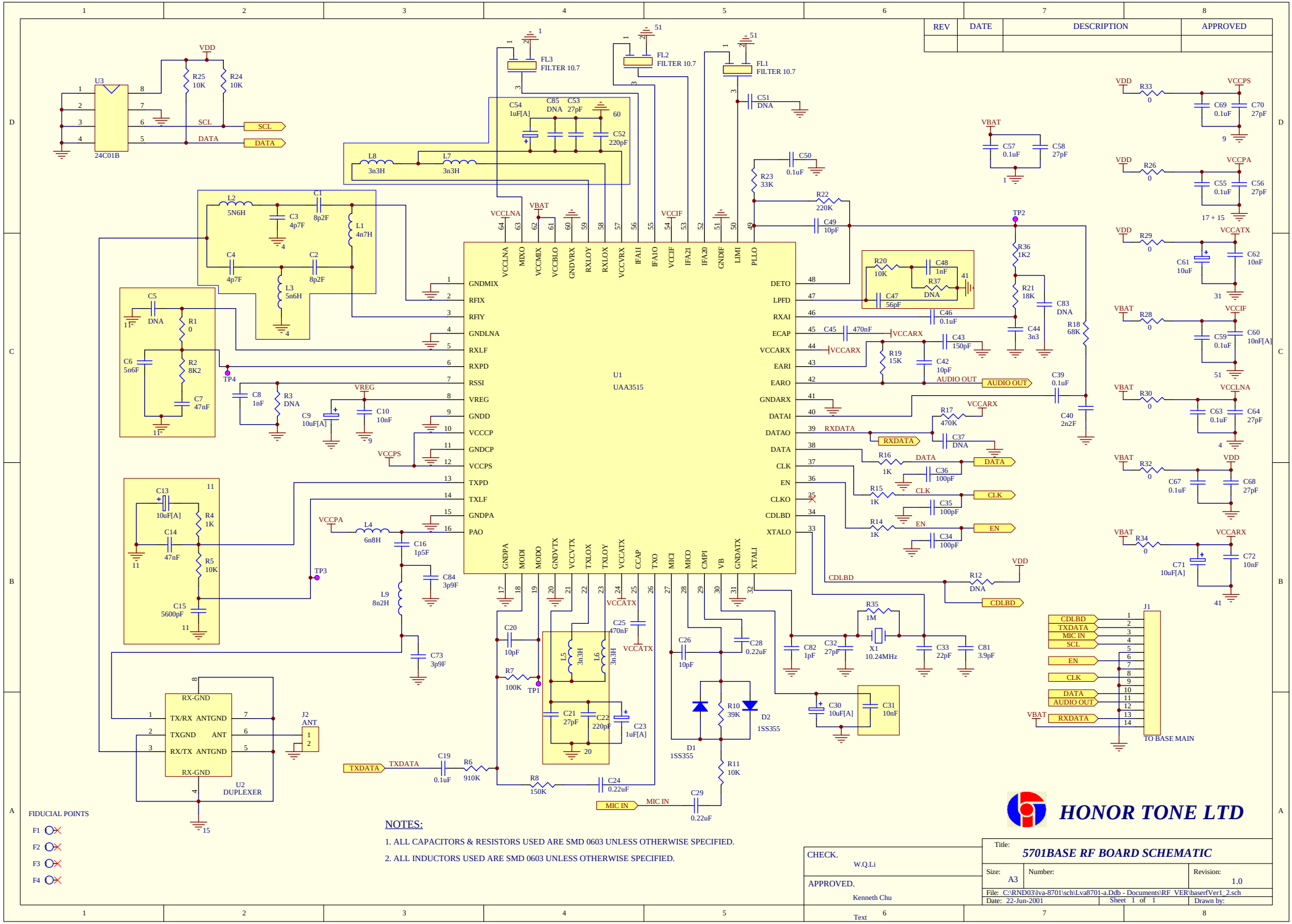

REV	DATE	DESCRIPTION	APPROVED

NOTES:

1. ALL CAPACITORS & RESISTORS USED ARE SMD 0603 UNLESS OTHERWISE SPECIFIED.
2. ALL INDUCTORS USED ARE SMD 0603 UNLESS OTHERWISE SPECIFIED.

HONOR TONE LTD

CHECK. W.Q.Li

APPROVED. Kenneth Chu

Text

Title: 5701BASE RF BOARD SCHEMATIC

Size: A3 | Number: | Revision: 1.0

File: C:\RND03\lva-8701\sch\Lva8701-a.Ddb - Documents\RF VER\baserfVer1_2.sch

Date: 22-Jun-2001 | Sheet 1 of 1 | Drawn by: