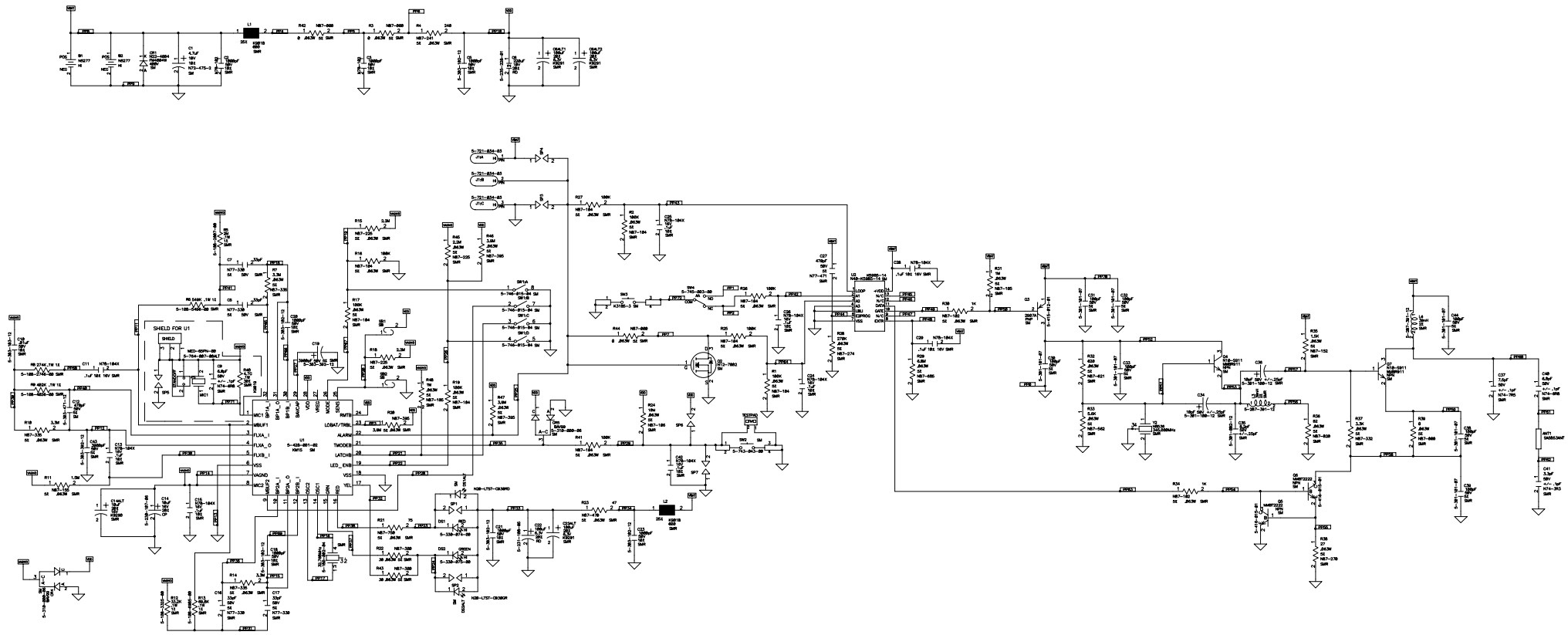ASSY REV	DESCRIPTION	DATE	APPROVED
1	RELEASE FOR PROTOTYPE	01-08-03