REV	DETAIL OF CHANGE	DATE
01	Initial release	

2407-2477MHz

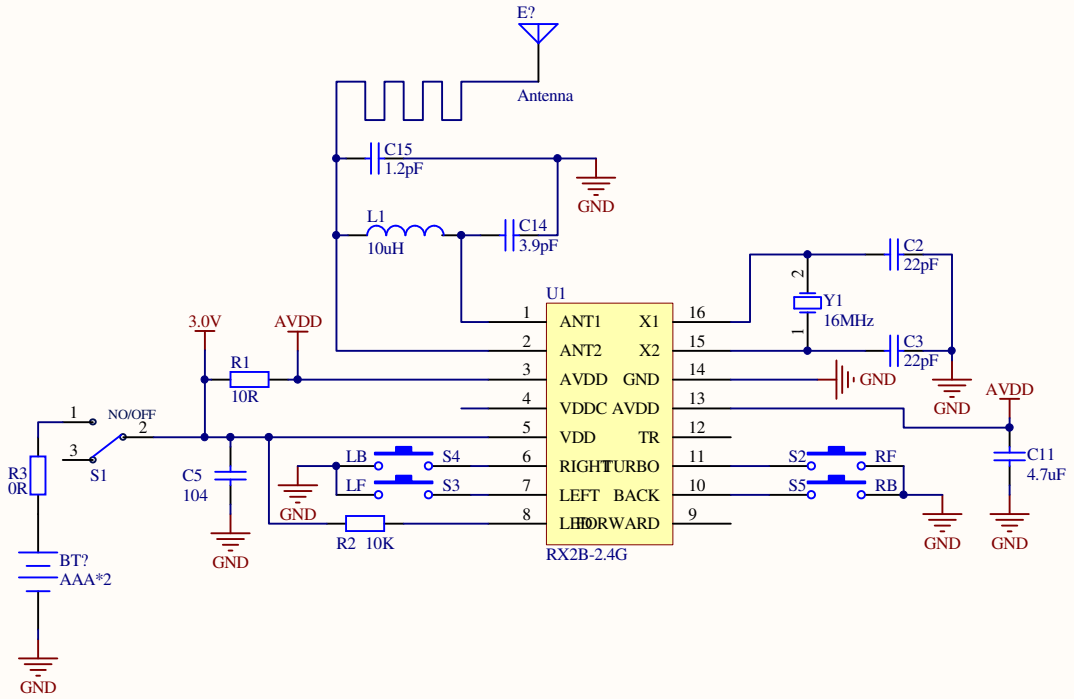

MGA Entertainment				DWG NAME:	SCHEMATIC CIRCUIT
				FORM NO.:	EN-051-01
ITEM NO.:	#643330			DRW / DATE:	
ITEM NAME:	Bumper Car- TX			CHK / DATE:	
SCALE:	A3	PAGE:	OF	APP / DATE:	