ISSUE	CHANGE DETAIL	DATE	CHECKED	APP.

27.145MHZ VERSION

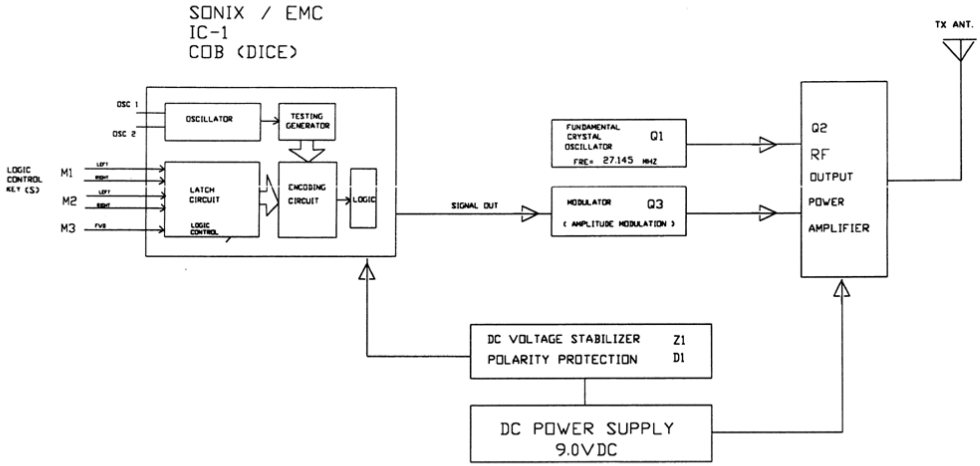

27.145MHZ VERSION

DO NOT SCALE DRAWING	TITLE BLOCK DIAGRAM	Q'TY	UNIT
UNLESS OTHERWISE SPECIFIC DEC ±0.1 ANGLE ±1°	MATERIAL VERSION ; 27.145MHZ	FINISH (TX SECTION)	SCALE
GENERAL DRAFT	MODEL RC AIR SURFER	PART NO. 412-341T01-270A	
UNLESS OTHERWISE SPECIFIC WALL THICKNESS	DRAWN B.LEE 12/2/03. / CHECKED	APPROVED J.LAM 12/2/2003.	SIZE A4

Dynamic industries co. ltd.