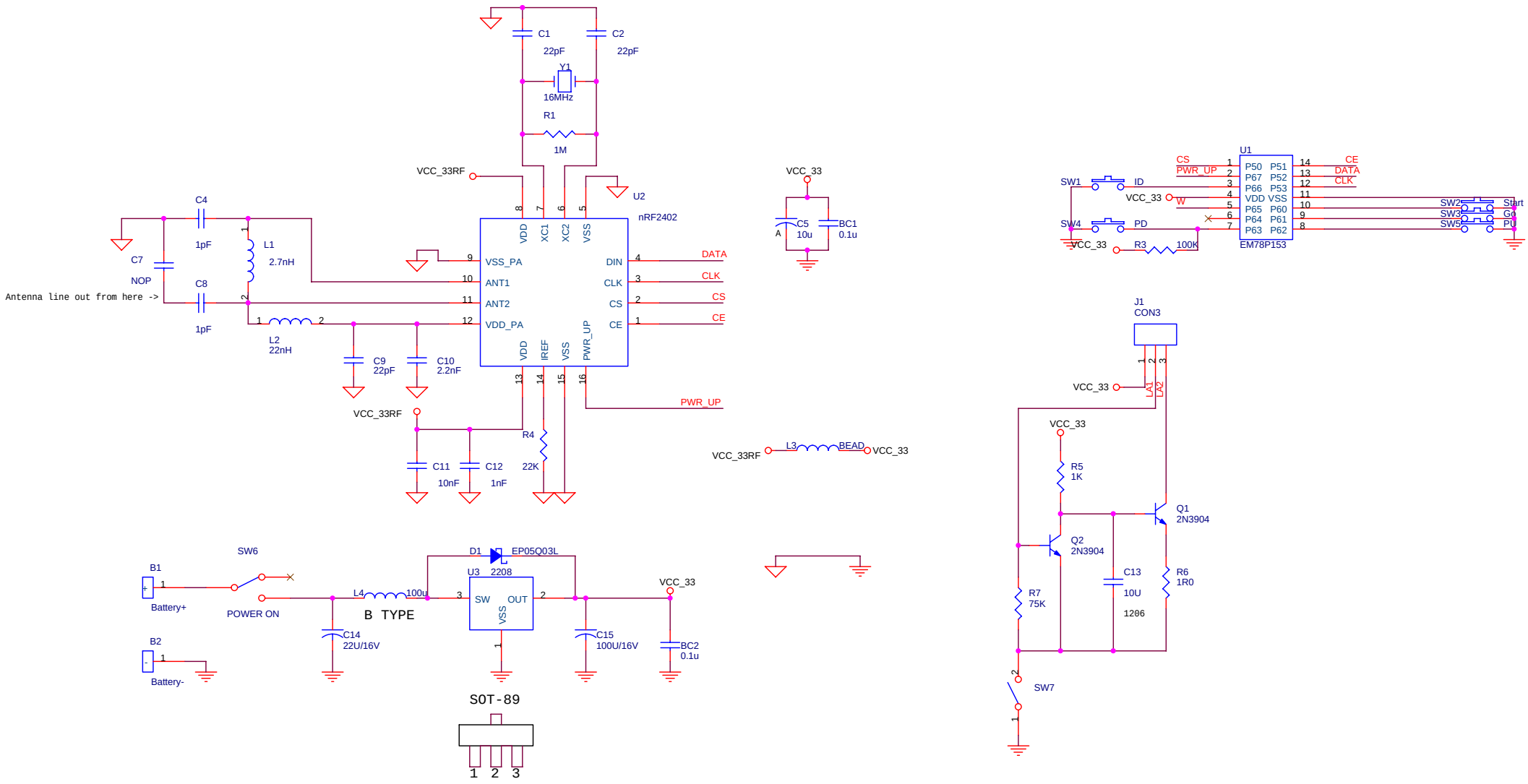

ITEM NO	DESCRIPTION	DRAWN BY	DATE

DRAWN BY:
CHECKED BY:
APPROVED BY:

Date: Tuesday, May 03, 2005

Title: ML0511TX

Size: B | Document Number: <Doc> | Rev: 1.1

Sheet 1 of 1