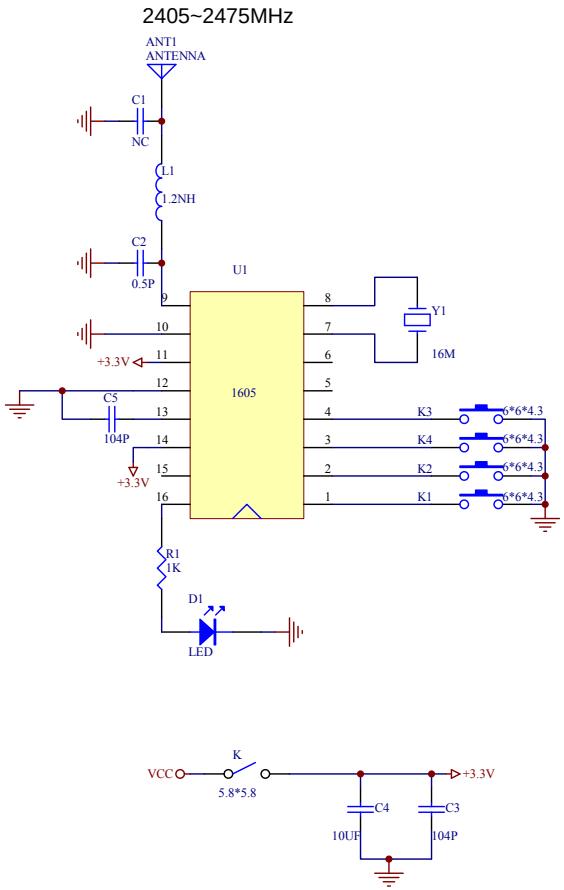


| | | |
|---|---|---|
| Title | XS-SX175T-2.4G | |
| Size B | Number | Revision |
| Date: 27-Mar-2018 | Sheet of | |
| File: G:\四轴\四轴IC资料\协亨\双星\米尔车 - 2.Drawing | Drawn By: | |