611 Center Ridge Drive
Austin, Texas 78753 USA

FREE +1 800 237 7769
MAIN +1 512 776 9000
FAX +1 512 776 9630

RB25F Antenna Patterns: BLE Antenna

Maximum Gain: 5.18 dBi

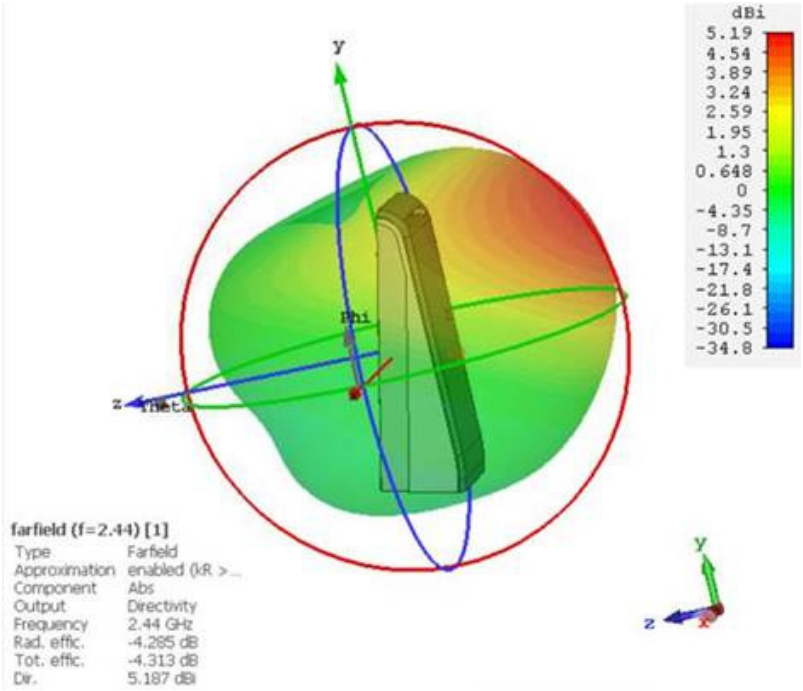

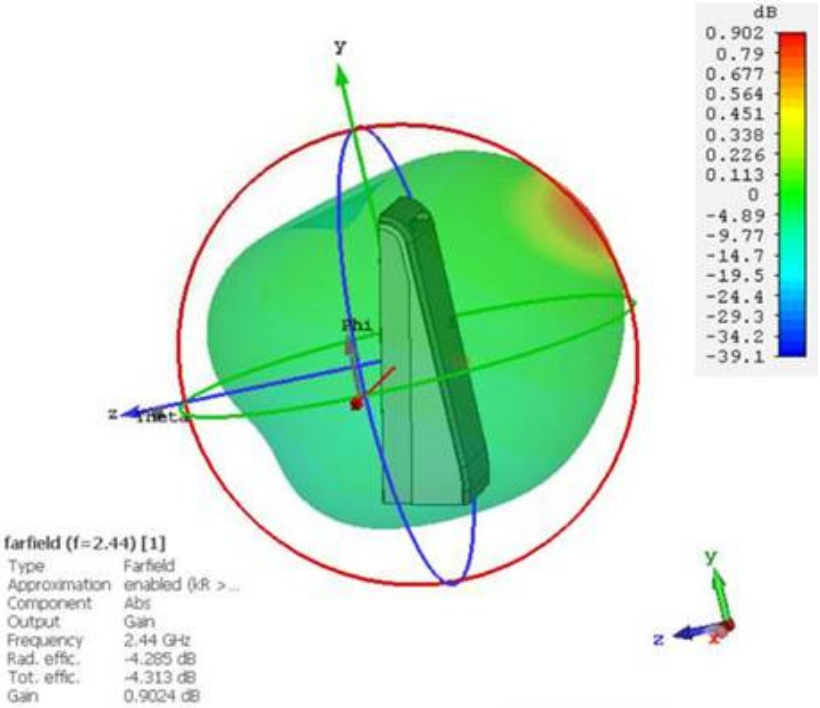

Farfield Gain Abs (Phi=0)

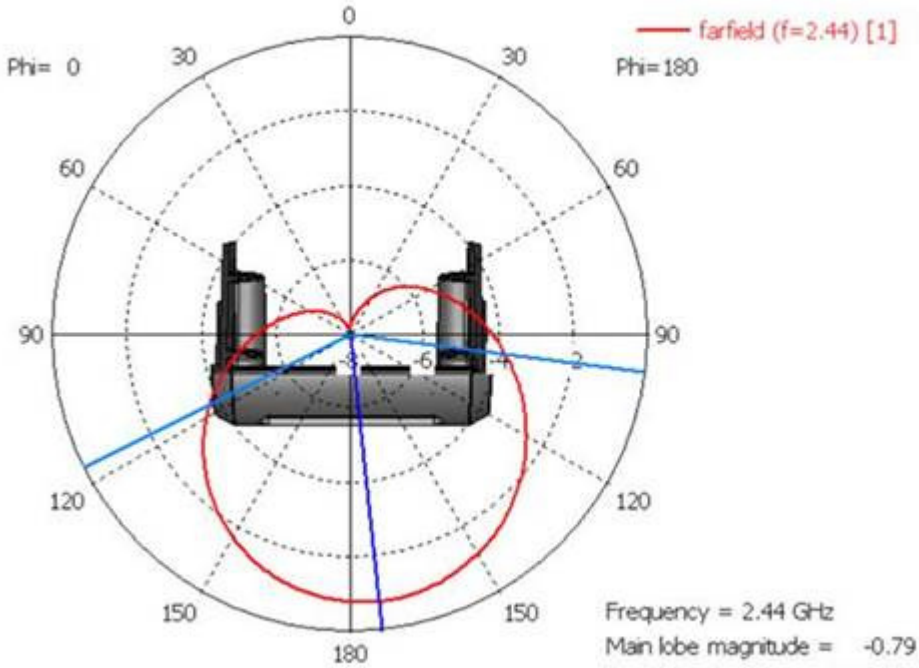

Frequency = 2.44 GHz
Main lobe magnitude = -0.79 dB
Main lobe direction = 174.0 deg.
Angular width (3 dB) = 146.0 deg.

Theta / Degree vs. dB

Farfield Gain Abs (Phi=90)

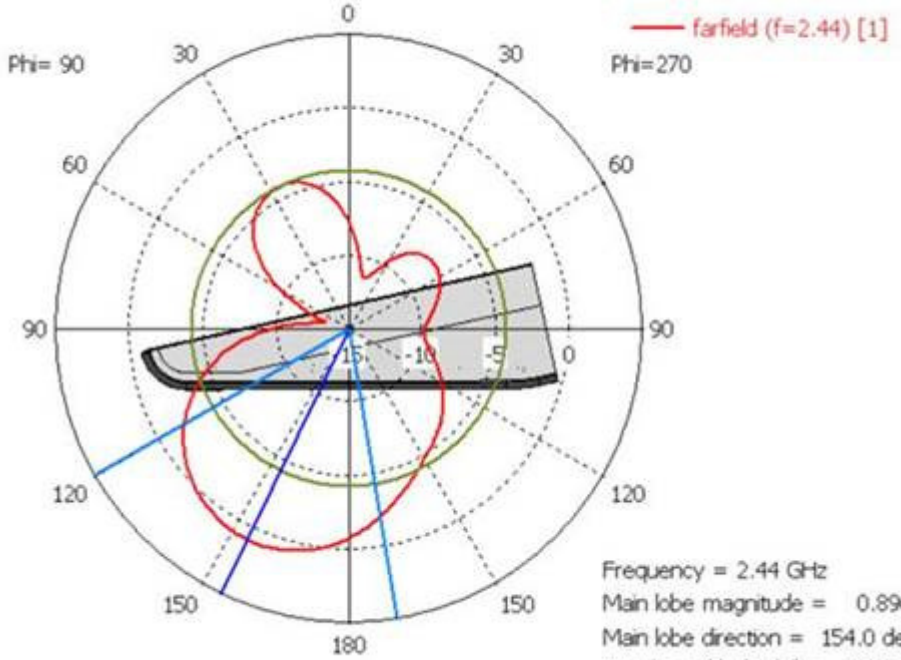

Frequency = 2.44 GHz
Main lobe magnitude = 0.896 dB
Main lobe direction = 154.0 deg.
Angular width (3 dB) = 69.6 deg.
Side lobe level = -5.1 dB

Theta / Degree vs. dB