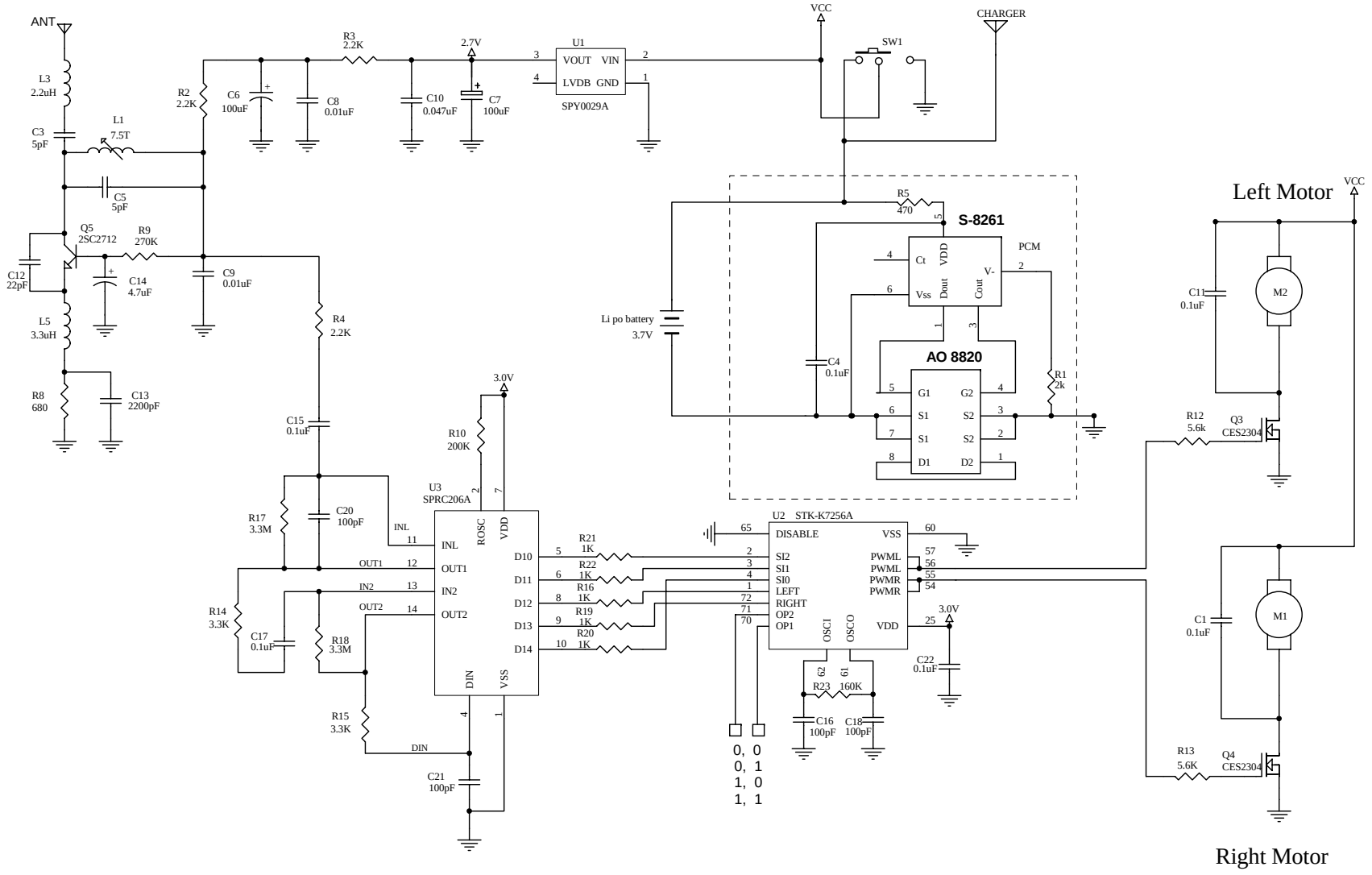

Title	Profile Plane (MATTEL)	
Size B	Number K8888 (49MHz RX)	Revision 01
Date: 20-Oct-2006		Sheet 1 of 1
File: C:\Documents and Settings\pe.JETTA\桌面\K8888(PP 49M).DDB		Drawn By: