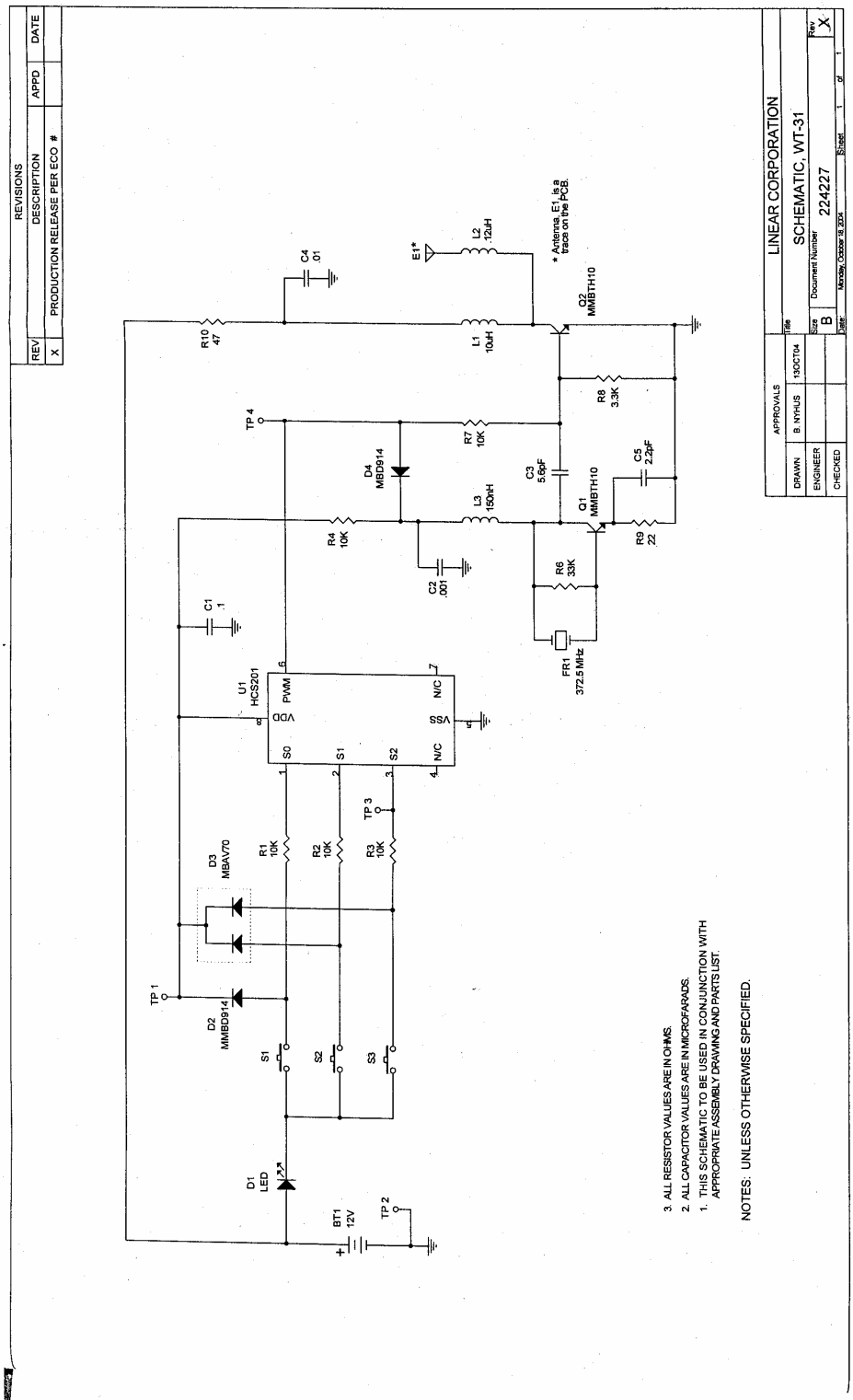
REVISIONS
REV
DESCRIPTION
APPD
DATE
X
PRODUCTION RELEASE PER ECO #
LINEAR CORPORATION
SCHEMATIC, WT-31
224227
APPROVALS
DRAWN
B. NYHUS
13OCT04
ENGINEER
CHECKED
Size
B
Document Number
Rev
X
Date: Monday, October 18, 2004
Sheet 1 of 1
U1
HCS201
VDD
PWM
VSS
N/C
S0
S1
S2
Q1
MMBTH10
Q2
MMBTH10
* Antenna, E1, is a trace on the PCB.
E1*
L1
10uH
L2
12uH
L3
150nH
C1
.1
C2
.001
C3
5.6pF
C4
.01
C5
2.2pF
R1
10K
R2
10K
R3
10K
R4
10K
R6
33K
R7
10K
R8
3.3K
R9
2.2
R10
47
FR1
372.5 MHz
D1
LED
D2
MMBD914
D3
MBAV70
D4
MBD914
BT1
12V
S1
S2
S3
TP 1
TP 2
TP 3
TP 4
3. ALL RESISTOR VALUES ARE IN OHMS.
2. ALL CAPACITOR VALUES ARE IN MICROFARADS.
1. THIS SCHEMATIC TO BE USED IN CONJUNCTION WITH APPROPRIATE ASSEMBLY DRAWING AND PARTS LIST.
NOTES: UNLESS OTHERWISE SPECIFIED.