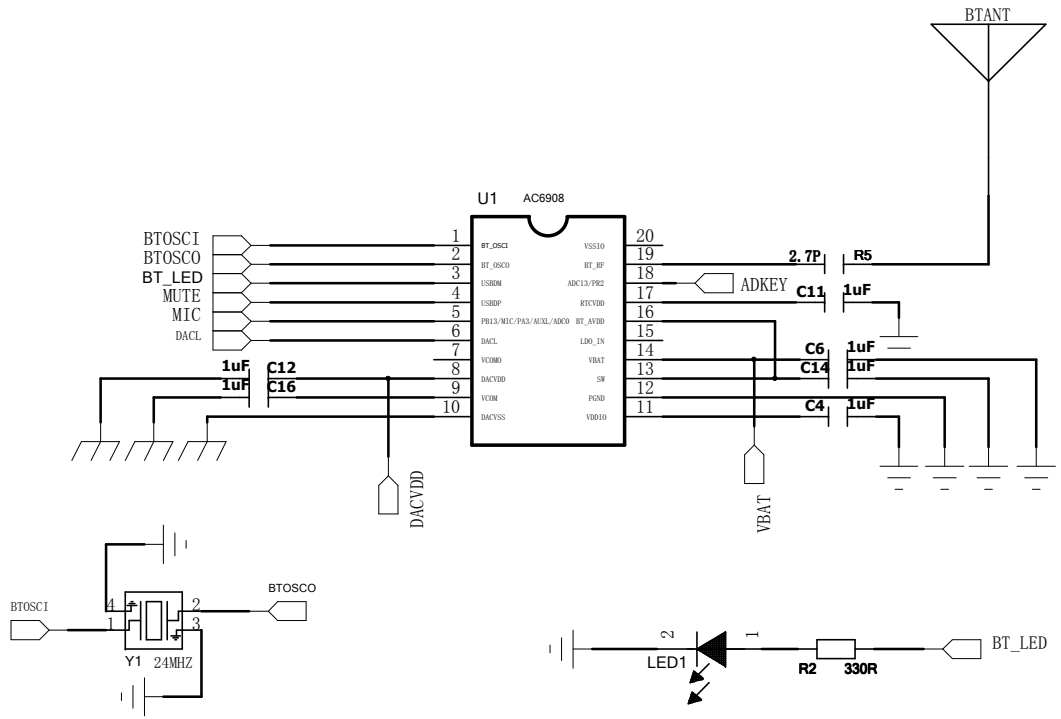
BTANT
U1
AC6908
BTOSCI
BTOSCO
BT_LED
MUTE
MIC
DACL
ADKEY
2.7P
R5
C11
1uF
C6
C14
C4
C12
C16
DACVDD
VBAT
BTOSCO
BTOSCI
Y1
24MHZ
LED1
R2
330R
BT_LED

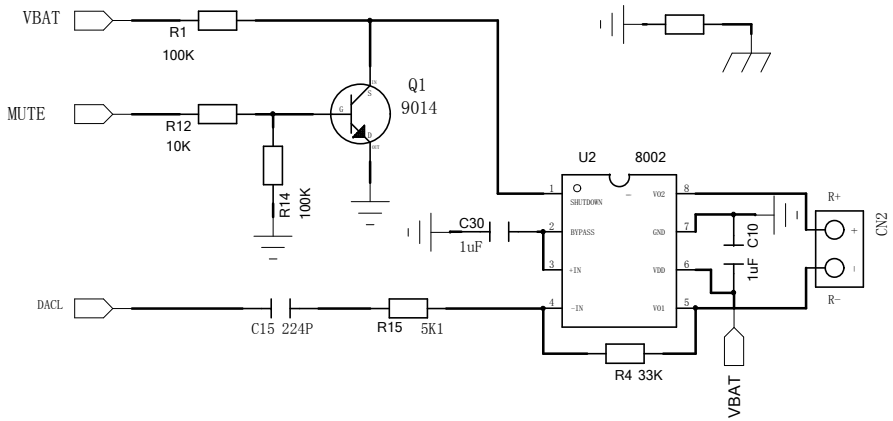
VBAT
R1
100K
MUTE
R12
10K
R14
100K
Q1
9014
U2
8002
C30
1uF
C10
1uF
R+
R-
CN2
DACL
C15 224P
R15
5K1
R4 33K
VBAT

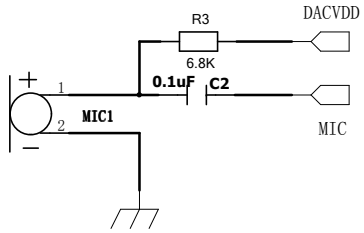
R3
6.8K
DACVDD
0.1uF
C2
MIC1
MIC

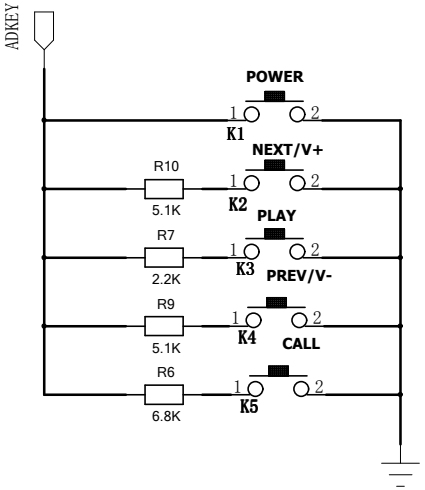
ADKEY
POWER
K1
NEXT/V+
R10
5.1K
K2
PLAY
R7
2.2K
K3
PREV/V-
R9
5.1K
K4
CALL
R6
6.8K
K5

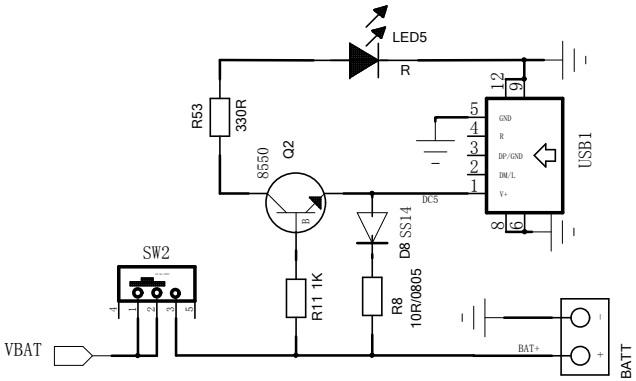
LED5
R
R53
330R
8550
Q2
USB1
DC5
D8 SS14
SW2
R11 1K
R8
10R/0805
VBAT
BAT+
BATT