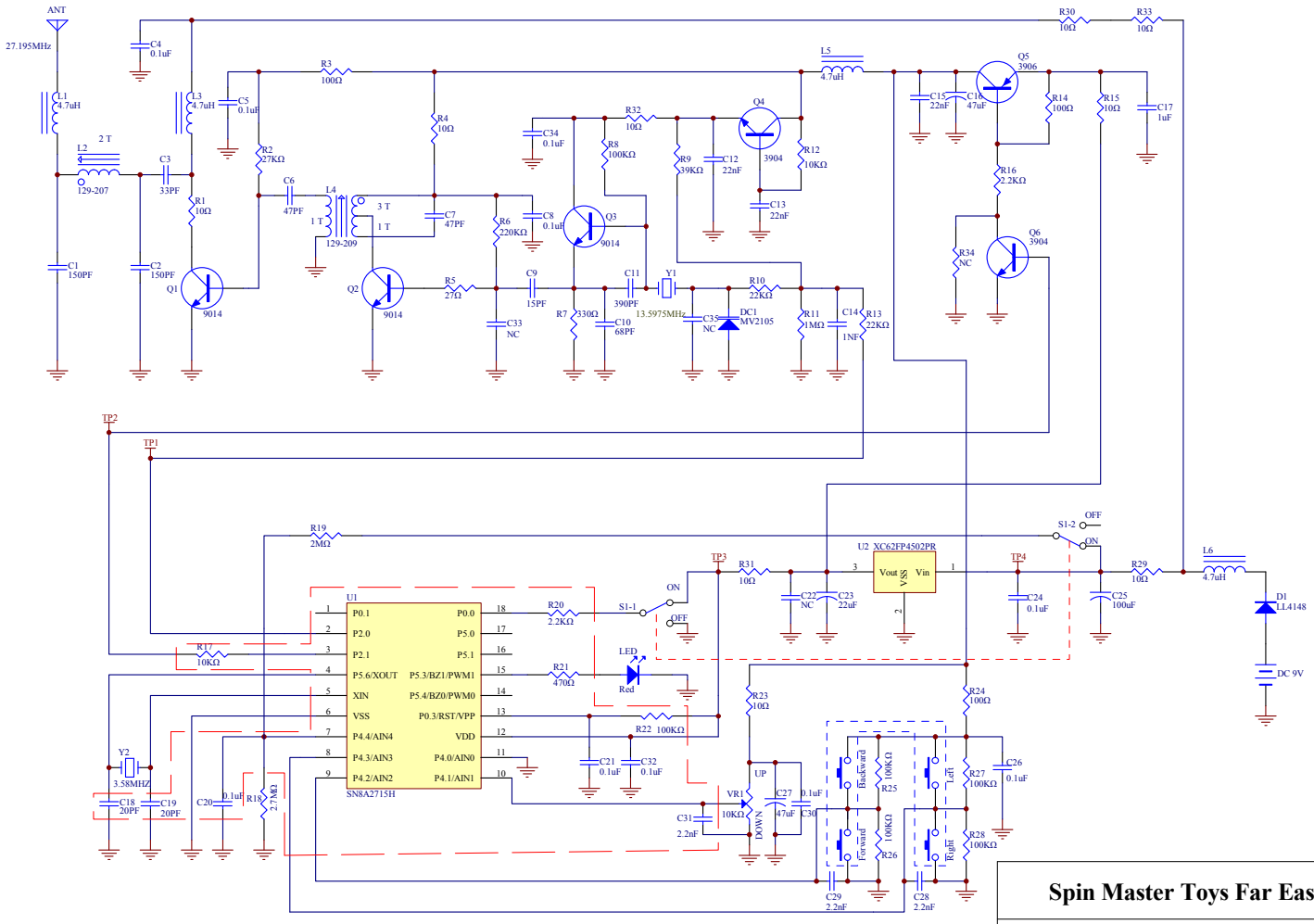

Note : NC=No Connection

Spin Master Toys Far East Limited

Title	Air Hogs R/C Helix Micro Helicopter 44208 Asst No. 44164 27.195Mhz TX Schematic		
Size A3	DWG NO	Issue Date: 29 Apr 2006	Rev. 7b
Drawn:	APP'D:	Sheet 1 of 1	