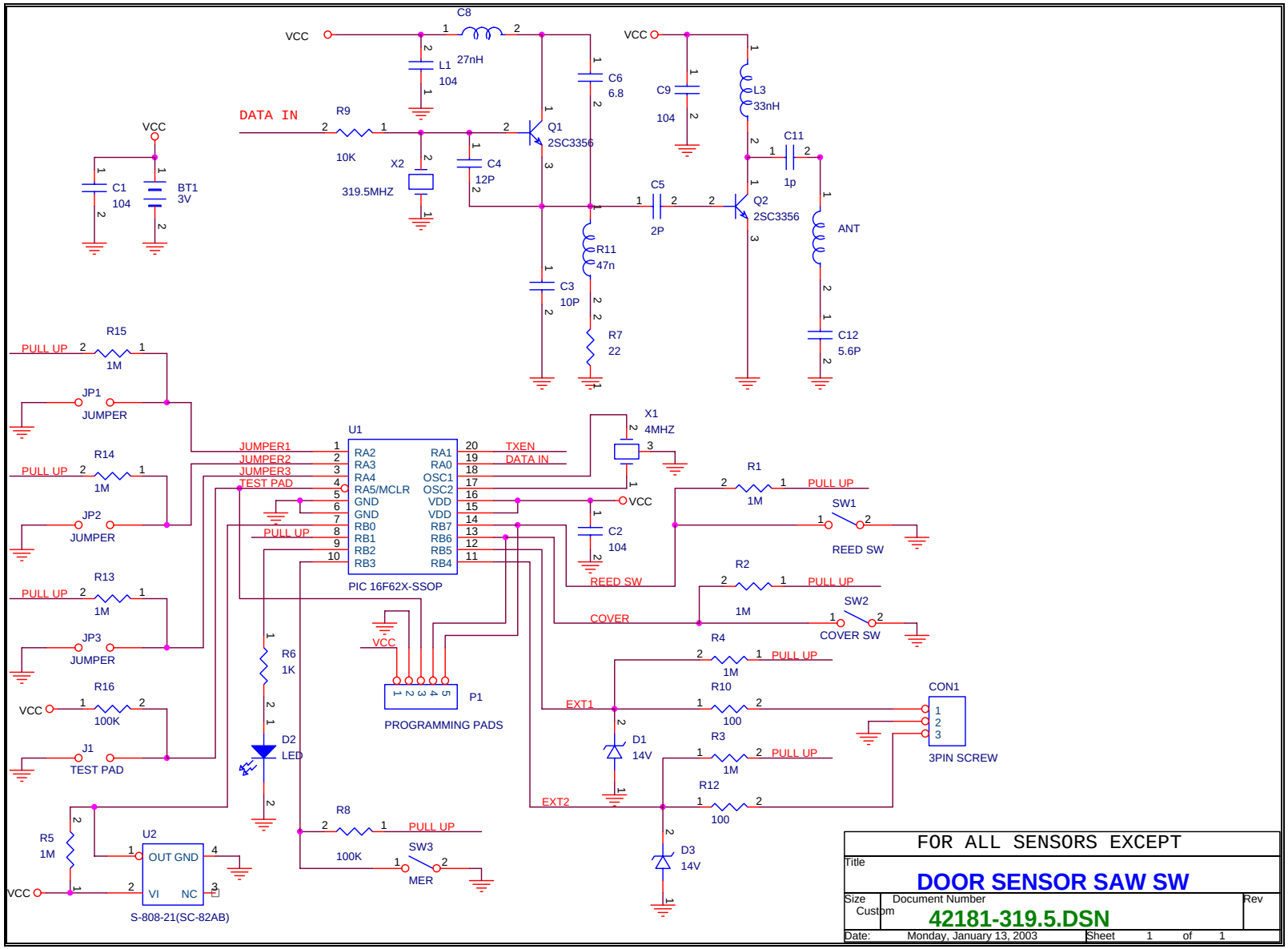

FOR ALL SENSORS EXCEPT

Title

DOOR SENSOR SAW SW

Size: Custom

Document Number: **42181-319.5.DSN**

Rev

Date: Monday, January 13, 2003

Sheet 1 of 1