Antenna specification for approval

Customer name	Botslab Inc.		
Model	DC-BD09-M5		
Antenna frequency	2.4GHZ		
Antenna function	WIFI antenna		
Antenna material	shrapnel	color	silvery
model	SF2231A-3B6-A		
Material number	SF2231A-3B6-A		
Customer Part Number			

Ward accepted the signature		Client acknowledges signature	
structure		Purchase	
Document control		structure	
radio frequency		engineering	
To examine		QC	
Responsible	LTT	To examine	
date 2025.03.18	Seal area	date 2025.03.18	Seal area

6th Floor, Building B, Hexi Hangcheng Industrial Zone, No. 135 Qianjin 2nd Road, Bao'an District, Shenzhen
Phone: 0755-29985185 Fax: 0755-27487028

Serial number	Certification number	Material type	Date of issue	Remarks
1	SHAEC24025471005	Tinned copper wire	2024-11-25	One year
2	SHAEC24027284565	halogen	2024-12-06	One year
3	SHAEC24027480902	Adhesive	2024-12-06	One year
4	SHAEC24029171725	FEP sheath	2024-12-26	One year
5	SHAEC24027284563	FEP insulation	2024-12-05	One year
6	SZXEC24002306404	Tin wire	2024-07-24	One year
7	SZXEC24002306408	Tin	2024-07-24	One year
8	ETR24600712	Printing ink	2024-06-14	One year
9	A2240123200102001E	Substrate	2024-03-20	One year
10	CANEC24028865417	EVA foam	2025-01-03	One year
11	A2240439752101001	Conductive cloth	2024-07-29	One year
12	SZXEC24002471802	Gold plating	2024-08-08	One year

6th Floor, Building B, Hexi Hangcheng Industrial Zone, No. 135 Qianjin 2nd Road, Bao'an District, Shenzhen
Phone: 0755-29985185 Fax: 0755-27487028

contents

一:Device support&testable antenna type.....1

二:Overview.....2

三:Match circuit diagram&machine image&antenna image.3

四:Antenna Standing Wave Ratio&Antenna Efficiency (VSWR) 4

五:Active data.....5

六:environmental treatment.....6

七:3D pattern.....7

八:structural drawings.....8

九:Package Drawing.....9

十:Inspection standards.....10

6th Floor, Building B, Hexi Hangcheng Industrial Zone, No. 135 Qianjin 2nd Road, Bao'an District, Shenzhen
Phone: 0755-29985185 Fax: 0755-27487028

一:Device support&testable antenna types

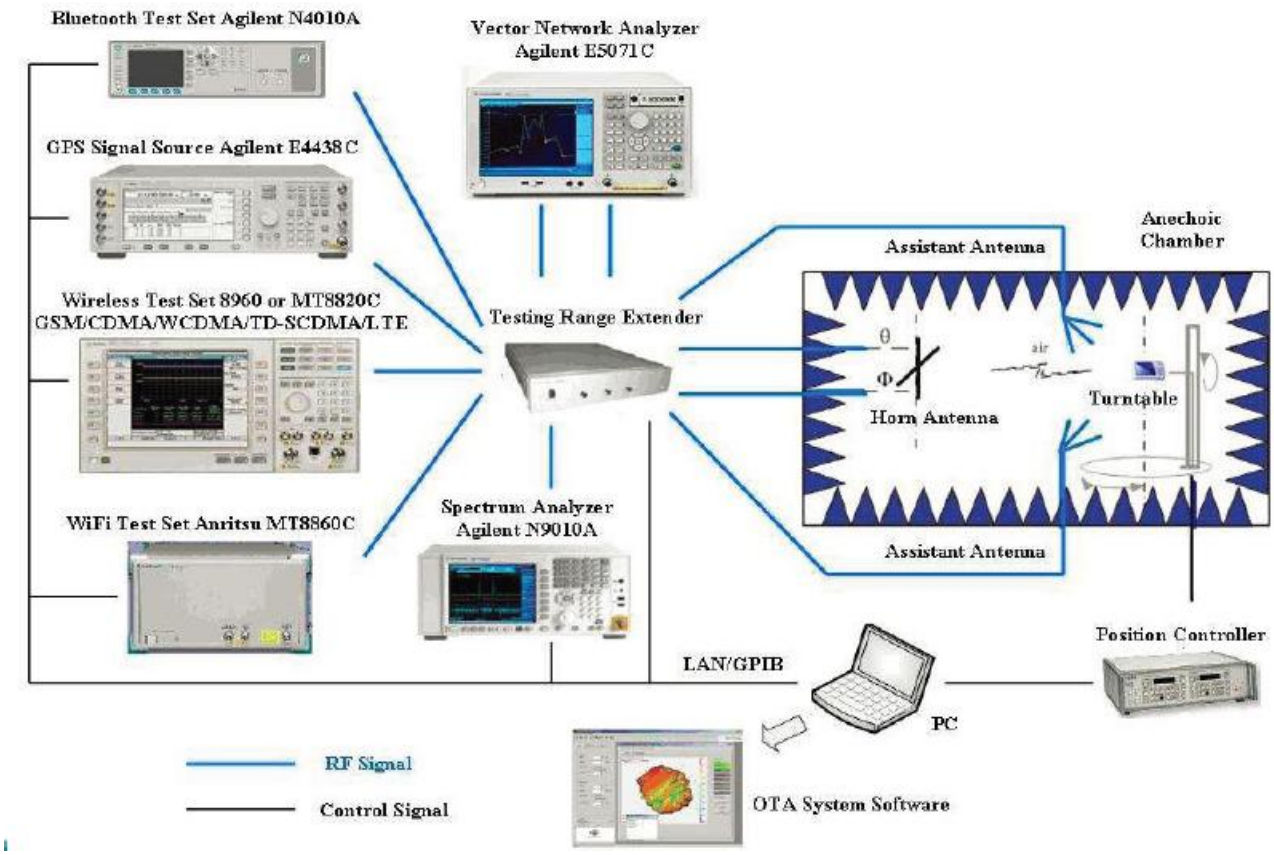

Antenna function	frequency range	Testing instruments	Testing method	Testing standards
2G antenna (GSM)	824MHz-960MHz, 1710MHz-1990MHz	5071B, 8960, OTA darkroom	Active testing, passive testing	Soward standards, customer requirements
3G antenna (WCDMA/TDSCDMA/CDMA-EVDO/2000)	824MHz-960MHz, 1710MHz-2170MHz	5071B, 8960, OTA darkroom	Active testing, passive testing	Soward standards, customer requirements
4G天线（LTE-FDD/LTE-TDD）		5071B、CMW500、SP8011、OTAdarkroom	Active testing, passive testing	Soward standards, customer requirements
WIFI antenna	2.4GHz-2.48GHz, 5.15GHz-5.35GHz, 5.725GHz-5.825GHz	5071B、CMW500、OTAdarkroom、Router、PC	Active testing, passive testing, APK testing, throughput testing	Soward standards, customer requirements
BT antenna	2.4GHz-2.48GHz	5071B、OTAdarkroom、Bluetooth Speaker	Active testing, passive testing, actual testing	Soward standards, customer requirements
Positioning antenna (GPS, GLONASS, Beidou, Galileo)	1575.42MHz ± 10MHz 1602MHz+0.5625MHz 1561MHz+2.046MHz	5071B、OTAdarkroom、APK	Active testing, passive testing, actual testing	Soward standards, customer requirements
NFC antenna	13.56MHz	5071B、Specialized testing fixture、OTAdarkroom、APK	Passive testing and actual measurement	Soward standards, customer requirements
Remote control antenna	433MHz	5071B、OTAdarkroom	Passive testing and actual measurement	Soward standards, customer requirements
NB_IOT	with LTE-FDD	CMW500 (high-end version)	Active testing, passive testing	Under construction (power standard basically consistent with 4G)

6th Floor, Building B, Hexi Hangcheng Industrial Zone, No. 135 Qianjin 2nd Road, Bao'an District, Shenzhen
Phone: 0755-29985185 Fax: 0755-27487028

二:overview

(1)Antenna performance

1.This approval sheet supports for MID project.Shrapnel antennas include in this project. This report is for the performance of WIFI antenna.

2.Antenna shape size: Meet the requirement of MID

3.Antenna band: 2400MHz~2500MHz

4.Antenna material: Antenna material meet the requirement of MID

5.Adhesive performance: Adhesive performance meet the requirement of MID

6.Antenna performance meet the spec below:

Description	2.4GHZ~2.5GHz	Units
VSWR	≤2.0	
Average Antenna Gain	≥-4.5	dB
Feed Impedance	50 ohms	
Operating Temperature	-40 to +85 deg C	
Polarization / Azimuth	Linear / Omni-directional	

(2)Mechanical Information

Mechanical Dimension	
Cable Length	NA
Description	WIFI antenna
Material	Shrapnel
Coaxial Cable	NA
Environmental	
Operation Temperature	-40 to +85 deg C
Storage Temperature	-40 to +85 deg C

三:Match circuit diagrams, machine images, and antenna images

(1)matching circuit

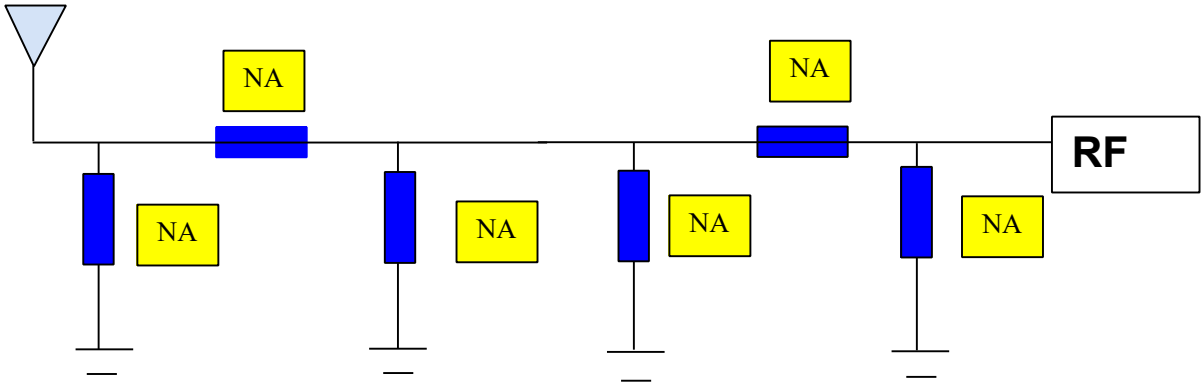

(2) Machine images&antenna images

6th Floor, Building B, Hexi Hangcheng Industrial Zone, No. 135 Qianjin 2nd Road, Bao'an District, Shenzhen
Phone: 0755-29985185 Fax: 0755-27487028

四:Antenna Standing Wave Ratio&Antenna Efficiency (VSWR)

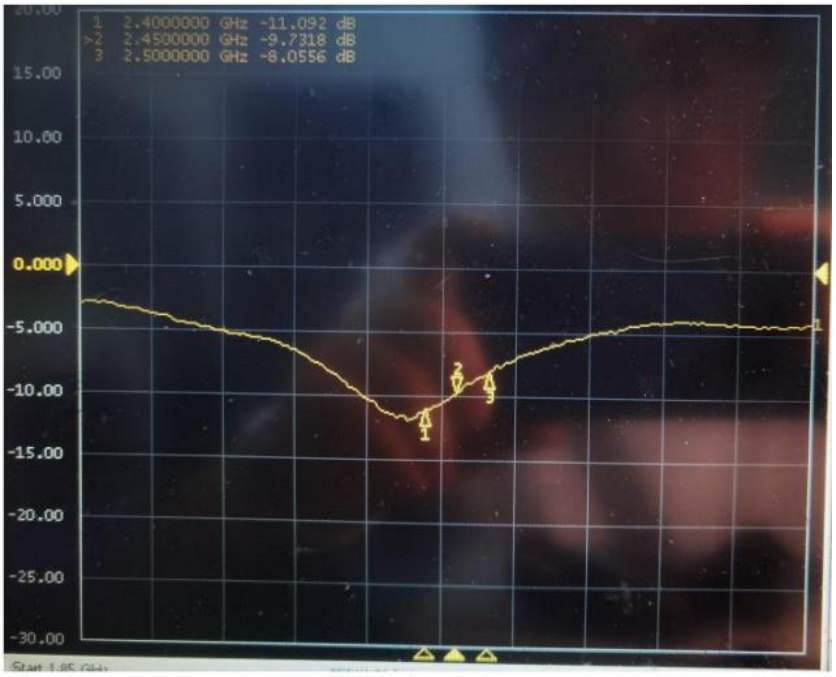

6th Floor, Building B, Hexi Hangcheng Industrial Zone, No. 135 Qianjin 2nd Road, Bao'an District, Shenzhen
Phone: 0755-29985185 Fax: 0755-27487028

Passive Test For 2.4G												
Freq (MHz)	Effi (%)	Effi (dB)	Gain (dBi)	Gain (dBd)	UHIS (%)	DHIS (%)	Max (dB)	Min (dB)	Directivity (dBi)	Beamwidth (3dB)	AttH (dB)	AttV (dB)
2400	59.3	-2.27	2.12	-0.03	28.914	30.387	2.12	-12.17	4.39	60	46.77	47.04
2410	61.57	-2.11	2.28	0.13	29.64	31.926	2.28	-12.11	4.39	60	46.94	47.16
2420	60.38	-2.19	2.17	0.02	29.124	31.256	2.17	-12.31	4.36	60	47.02	47.39
2430	60.05	-2.21	2.07	-0.08	28.867	31.183	2.07	-12.13	4.28	60	47.31	47.67
2440	61.5	-2.11	2.04	-0.11	29.726	31.776	2.04	-11.99	4.16	60	47.68	47.91
2450	62.3	-2.05	2	-0.15	30.049	32.255	2	-11.72	4.06	60	47.98	48.27
2460	63.16	-2	1.99	-0.16	30.758	32.406	1.99	-11.47	3.99	60	47.79	48.02
2470	62.16	-2.07	1.86	-0.29	30.308	31.848	1.86	-11.22	3.92	60	47.6	47.7
2480	62.7	-2.03	1.79	-0.36	30.701	31.997	1.79	-11.02	3.82	60	47.93	48.05
2490	60.02	-2.22	1.56	-0.59	29.299	30.721	1.56	-11.32	3.78	60	48.1	47.95
2500	58.94	-2.3	1.46	-0.69	28.649	30.29	1.46	-11.32	3.76	60	48.13	48.09

五:Active data

Test Result	802.11b : 11MBps 20M		
	1	6	11
Frequency (MHz)	2412	2437	2462
TRP(dBm)	14.85	14.19	13.82
TIS(dBm)	-80.74	-80.98	-80.45
Test Result	802.11n : MCS7 20M		
	1	6	11
Frequency (MHz)	2412	2437	2462
TRP(dBm)	13.88	12.69	11.53
TIS(dBm)	-62.97	-63.31	-63.55

七:3D pattern

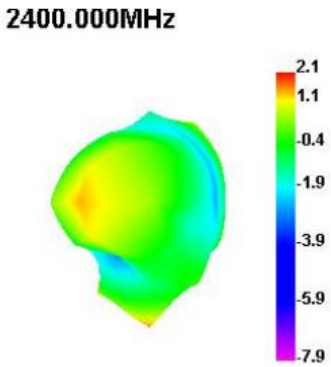

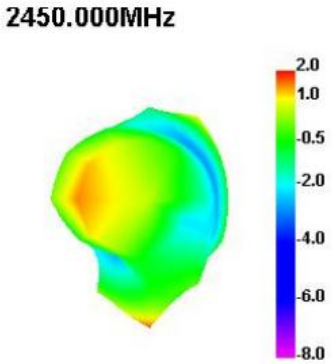

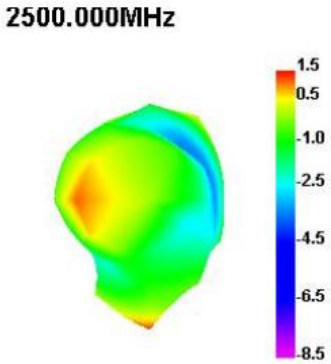

八:structural drawings

6th Floor, Building B, Hexi Hangcheng Industrial Zone, No. 135 Qianjin 2nd Road, Bao'an District, Shenzhen
Phone: 0755-29985185 Fax: 0755-27487028

Version	Modify content	Modified by	Modification date

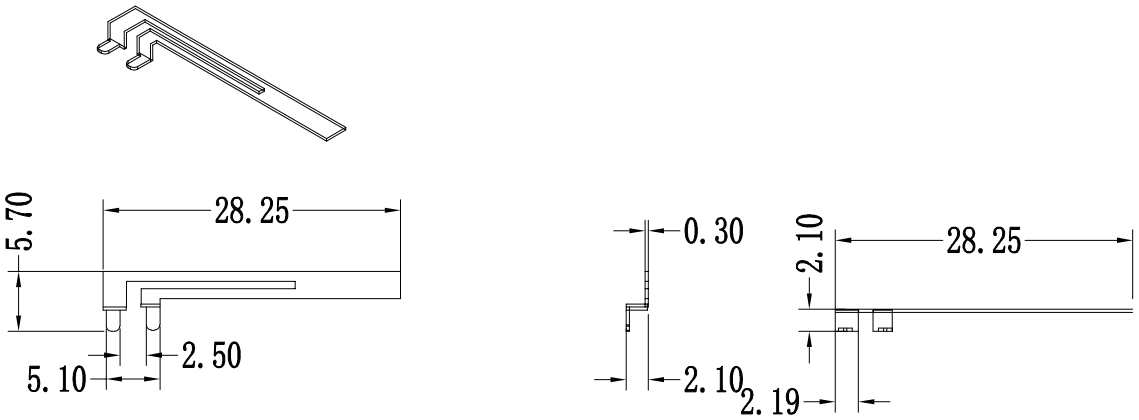

Packing requirements:
1.PE sealed pocket packing
2.500pcs/ bag.

Note:
1. Dimensions with * sign or tolerance are key dimensions, without fillet R0.2mm. Unmarked tolerances are tested according to Class B tolerances.
Hole size of all cut positions
The tolerance is ±0.05and the height of the cloak shall not exceed 0.02mm.
two。
2.The shrapnel is made of white copper and the thickness is 0.3mm.
3. Salt spray was tested for 24 hours.

ShenZhen SWARD Communication Technology Co.Ltd

Unit: mm

GENERAL TOLERANCE

DIM \ CRADE	A	B	C
0-6	±0.03	±0.05	±0.10
6-18	±0.05	±0.07	±0.15
18-30	±0.07	±0.10	±0.20
30-50	±0.10	±0.15	±0.30
50-100	±0.15	±0.20	±0.50
ANGULAR ∠	±0.5°		

name: WIFI Antenna	date: 2025.3.18
Material number: SF2231A-3B6-A	RD: ZYA
Material: White copper 2/4H	R F:
Surface treatment: Clean	approval:
color: 本色	percentage: 1:1 / Version: A

九:Package Drawing

1.Packaging photos (pictures):

1、Photos or pictures of individual material packaging	2、Photos or pictures of single-layer placement of inner packaging
 notes:	 notes:
3、Photos or pictures of the outer packaging	4、 Supplier material packaging anti-counterfeiting mark
 notes:	notes:

2.Material Packaging Information Form:

Serial Number	Material name	material specification	material	Is it anti-static	Quantity of single box packaging	Single box packaging weight (KG)	notes
1	WIFI antenna	28.25*5.70*0.3mm	nickel silver	deny	NA	NA	
2	external packing	26.2*20*20mm	Corrugated paper (B=B)	deny	NA		
The shipping packaging method is (4): 1. Roll packaging; 2. Disk installation; 3. Bulk; 4. Carton packaging; 5. Rubber box packaging; 6. Other_____							

6th Floor, Building B, Hexi Hangcheng Industrial Zone, No. 135 Qianjin 2nd Road, Bao'an District, Shenzhen
Phone: 0755-29985185 Fax: 0755-27487028

十:Inspection standards

Inspection standards

customer	Qihu 360	Product name and specifications	SF2231A-3B6-A	Number of samples	3PCS	Sample delivery date	2025.03.18
Inspection standards	■normal inspection		☐tightened inspection		☐Reduced inspection		
Sampling method	MIL-STD-105E Sampling Table AQL:0.040%						
Sampling number	10				Sampling results	OK	

project	inspection content	Inspection standards	Testing method	Inspection results	judge
Packaging inspection	OQC inspection	1.Packaging method that meets customer requirements, without mixing.		OK	qualified
		2.Accurate quantity and clear spare parts		OK	qualified
		3.Clear, complete, and error free labeling, with clear markings on the tail box		OK	qualified
Dimensional and visual inspection	IQC inspection	1.Main body size inspection, meeting accuracy requirements (main body external dimensions and thickness)	Calipers/micrometers	Standard size Outline Tolerance Positive or negative 0.01 / Sample 1 / Sample 2 / Sample 3 long / 28.25 / 28.25 / 28.25 wide / 5.70 / 5.70 / 5.70 tall / 0.30 / 0.30 / 0.30	qualified
		2.The color is consistent with the drawing requirements, with no color difference	样品对比	OK	qualified
		3.The surface is free of indentation, dirt, burrs, and oxidation	目测	OK	qualified
		4.Surface treatment must comply with the drawings and whether tin has been applied	目测/烙铁实验	OK	qualified
other					
Final judgment	■OK			☐NG&	

approval: Yang Wende to examine: Tang Liuxing tabulation: Li Tingting

6th Floor, Building B, Hexi Hangcheng Industrial Zone, No. 135 Qianjin 2nd Road, Bao'an District, Shenzhen
Phone: 0755-29985185 Fax: 0755-27487028