THIS PCB HAS RED SOLDER MASK

QUASAR-NGWTQCS4490
MB EV1 V19

REVISIONS							
REV	ZONE	ECO	DESCRIPTION	E.C.	BY	APVD.	DATE
<STI_FIRSTREV>			RELEASE PER PPD # <STI_FIRSTRELEASE_NUMBER>				

TABLE OF CONTENTS

PAGE2 BLOCK DIAGRAM
PAGE3 POWER DIAGRAM
PAGE4 QCS4490:CONTROL
PAGE5 QCS4490:GPIOS
PAGE6 QCS4490:I2C PULL UPS
PAGE7 QCS4490:DSI/CSI/PCIE
PAGE8 QCS4490:RF QLINK INTERFACE
PAGE9 QCS4490:EBI0/1
PAGE10-13 QCS4490:PWR1/2/3/4/5
PAGE14 QCS4490:GND
PAGE15 PMK4450
PAGE16 PM4450:CONTROL/GPIOS/GND
PAGE17-18 PM4450:SMPS1-9/VREG S1B-S9B
PAGE19 PM4450:LDOS/VREG L1B-L28B
PAGE20 PM4450C CORE PMIC
PAGE21 PM7250B-2:CHARGER
PAGE22 PM7250B-2:HK/GPIOS/HAPTICS
PAGE23 PM8010:CAMERA POWER
PAGE24 MEMORY:UFS
PAGE25 MEMORY:LPDDR5
PAGE26 MEMORY:LPDDR5 POWER/GND
PAGE27 INDICATOR AND FLASH LED
PAGE28 USB OTG PWR SWITCH, DC_IN_BOOT_UP WORKAROUND
PAGE29 DISPLAY AND CTP CONNECTOR
PAGE30 DISPLAY DRIVER, BIAS DRIVER
PAGE31 KEYPAD CONNECTOR, 3-KEY RESET
PAGE32 SUPERCAP CHARGING/DISCHARGING
PAGE33 BATTERY MONITOR, PWR BUTTON BLOCK
PAGE34 BATTERY CONN.,BATTERY THERM DETECTION
PAGE35 POWER MUX DC POWER INPUT
PAGE36 POWER MUX/USB POWER INPUT
PAGE37 BOOT POWER 5P0, BUCK/BOOT POWER 3P3
PAGE38 AUDIO CODEC WCD9370
PAGE39 CLASS D AMP/SPK CONNECTOR, AUDIO HEADSET
PAGE40 I/O CONNECTORCONTROL
PAGE41 I/O CONNECTORLEFT SIDE
PAGE42 I/O CONNECTORRIGHT SIDE
PAGE43 GYRO/LIGHT SENSOR, PWRKEY, DMIC
PAGE44 FRONT CAMERA CONNECTOR
PAGE45 SIDE CAMERA CONNECTOR
PAGE46 SHIELDING/SCREW HOLES/NPTH/PTH
PAGE47 ELEMENT SECURE
PAGE48 DEBUG INTERFACE AND CONNECTOR
PAGE49-50 OM9716 NFC
PAGE51 RESERVED PAGE
PAGE52 WLAN BLOCK DIAGRAM:WCN6856HP12B
PAGE53 WCN6856:POWER
PAGE54-55 WCN6856:I/O
PAGE56 WIFI 2G/5G ANTENNA
PAGE57 2.4GHZ CHAIN 0/1 XFEM
PAGE58 5GHZ-7GHZ CHAIN 0/1 XFEM
PAGE59-60 RESERVED PAGE
PAGE61 HISTORY
PAGE62
PAGE63

ZEBRA CONFIDENTIAL

ITEM	QTY.	PART NO.	DESCRIPTION	REMARKS/REF.SYMBOL

PARTS LIST

ZEBRA TECHNOLOGIES CORPORATION
CONFIDENTIAL RESTRICTED

DIMENSIONS ARE IN INCHES
UNLESS OTHERWISE SPECIFIED

	MM	INCH
XX	±	± .01
XXX	±	± .005

ANGLES ± 1° FRACTIONS ± 1/64

MATERIAL:

FINISH:

APPROVALS	DATE
DRAWN <STI_DRAWN_APPR_DATE>	
CHECKED <STI_CHECKED_APPR_DATE>	
ENGINEER <STI_ENGINEER_APPR_DATE>	
MFG. ENG. <STI_MFG_ENG_APPR_DATE>	
PRODUCT <STI_PRODUCT_APPR_DATE>	
QUALITY	
TEST ENG.	

ZEBRA TECHNOLOGIES CORP.
HOLTSVILLE, NEW YORK 11742

QUASAR MAIN BOARD
TITLE PAGE

SIZE D | DWG. NO. TBD | REV V18

Thu Nov 02 16:49:39 2023 | SHEET 1 OF 61

NEXT ASSY | USED ON

DO NOT SCALE DRAWING

BLOCK DIAGRAM

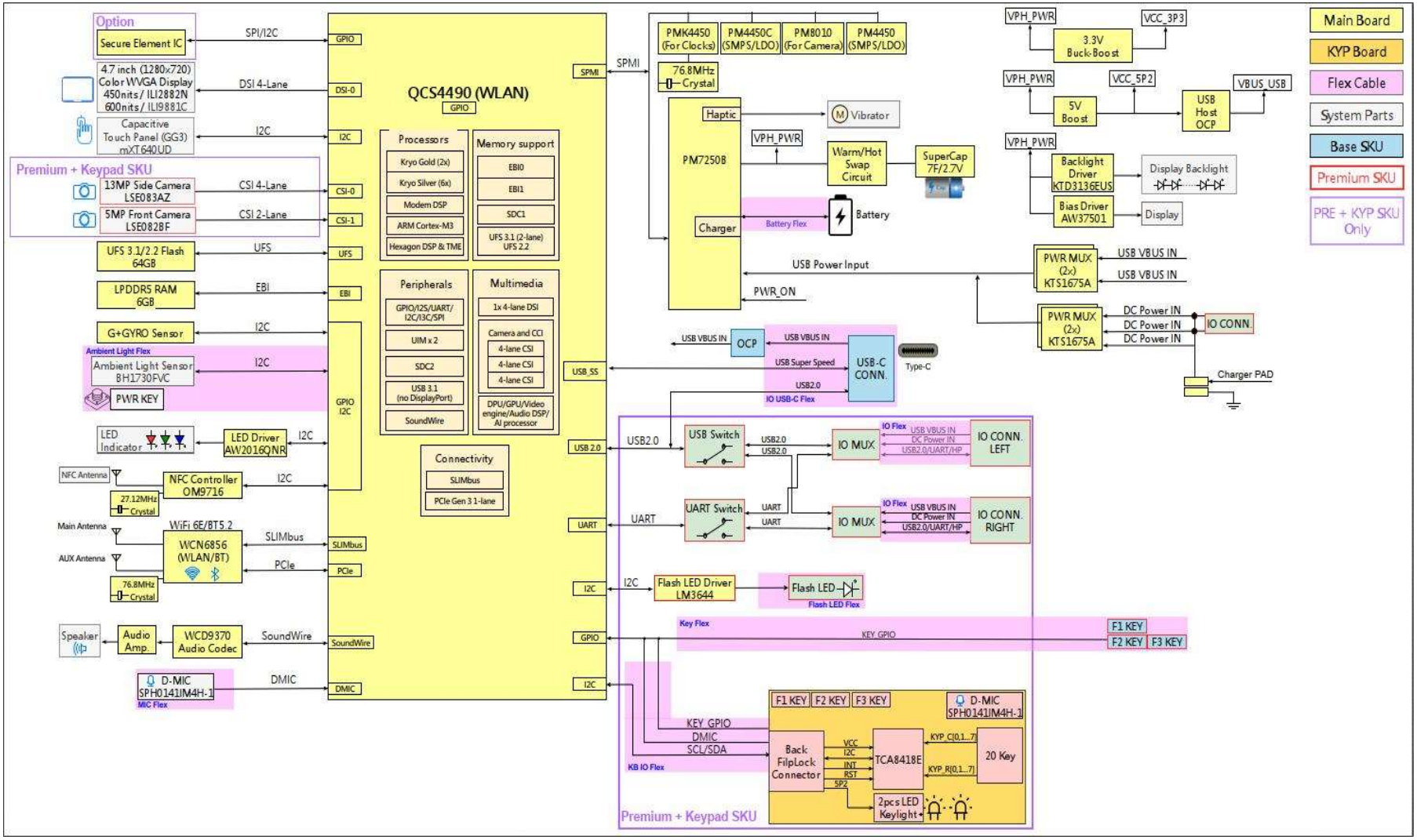

REV	ZONE		DESCRIPTION	E.C.	BY	APVD.	DATE
			SEE SHEET 1				

ZEBRA CONFIDENTIAL

ZEBRA TECHNOLOGIES CORP.
HOLTSVILLE, NEW YORK 11742

$STI_TITLE_1
BLOCK DIAGRAM

SIZE D | DWG. NO. $STI_DRAWING_NO | REV $STI_REV

$CON_LAST_MODIFIED

POWER DIAGRAM

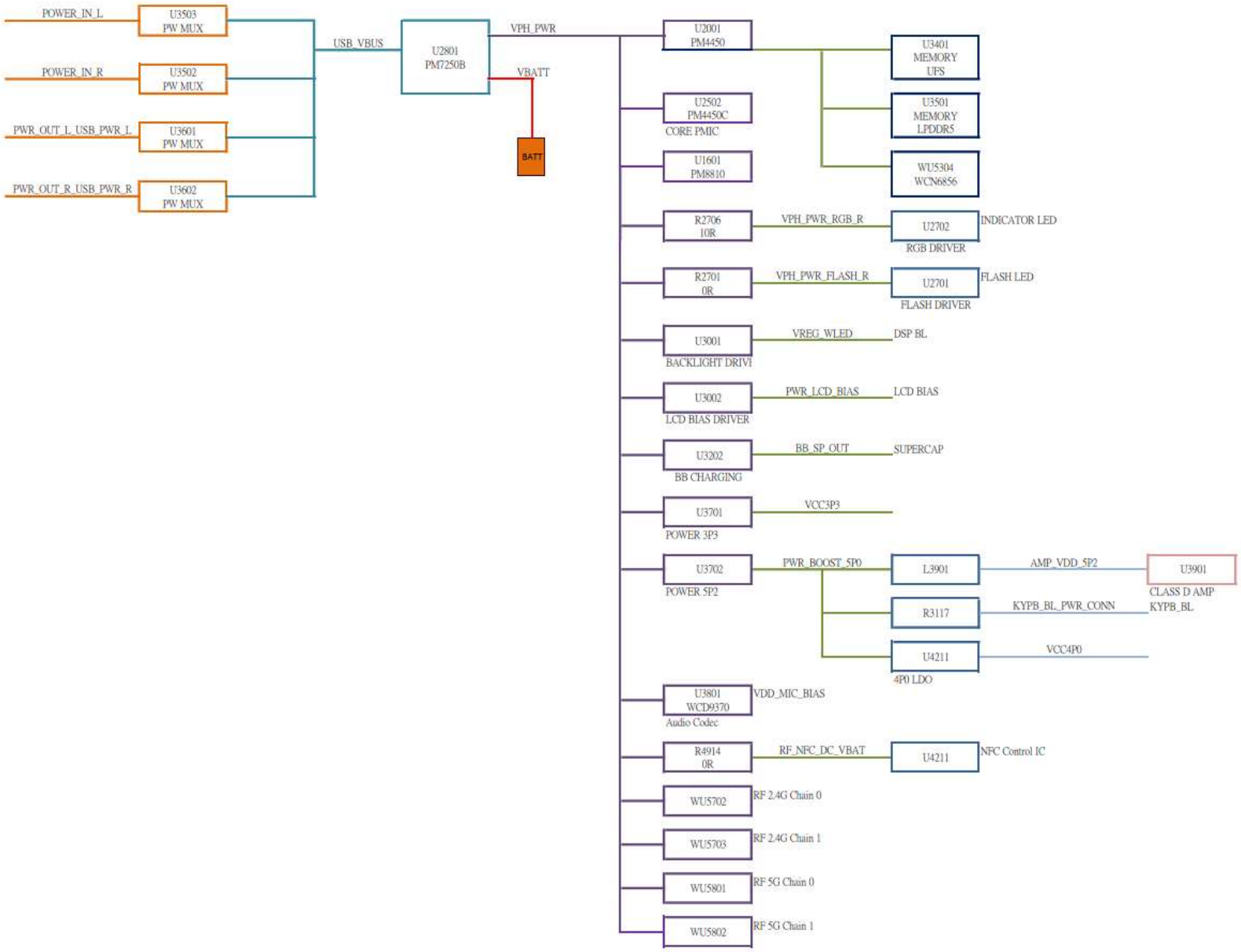

REV	ZONE		REVISIONS DESCRIPTION	E.C.	BY	APVD.	DATE
			SEE SHEET 1				

ZEBRA CONFIDENTIAL

ZEBRA TECHNOLOGIES CORP.
HOLTSVILLE, NEW YORK 11742

$STI_TITLE_1
POWER DIAGRAM

SIZE D | DWG. NO. $STI_DRAWING_NO | REV $STI_REV

$CON_LAST_MODIFIED | $CONTROLLED BY | TOTAL PAGES

QCS4490:CONTROL

REV	ZONE	REV	DESCRIPTION	E.C.	BY	APVD.	DATE
			SEE SHEET 1				

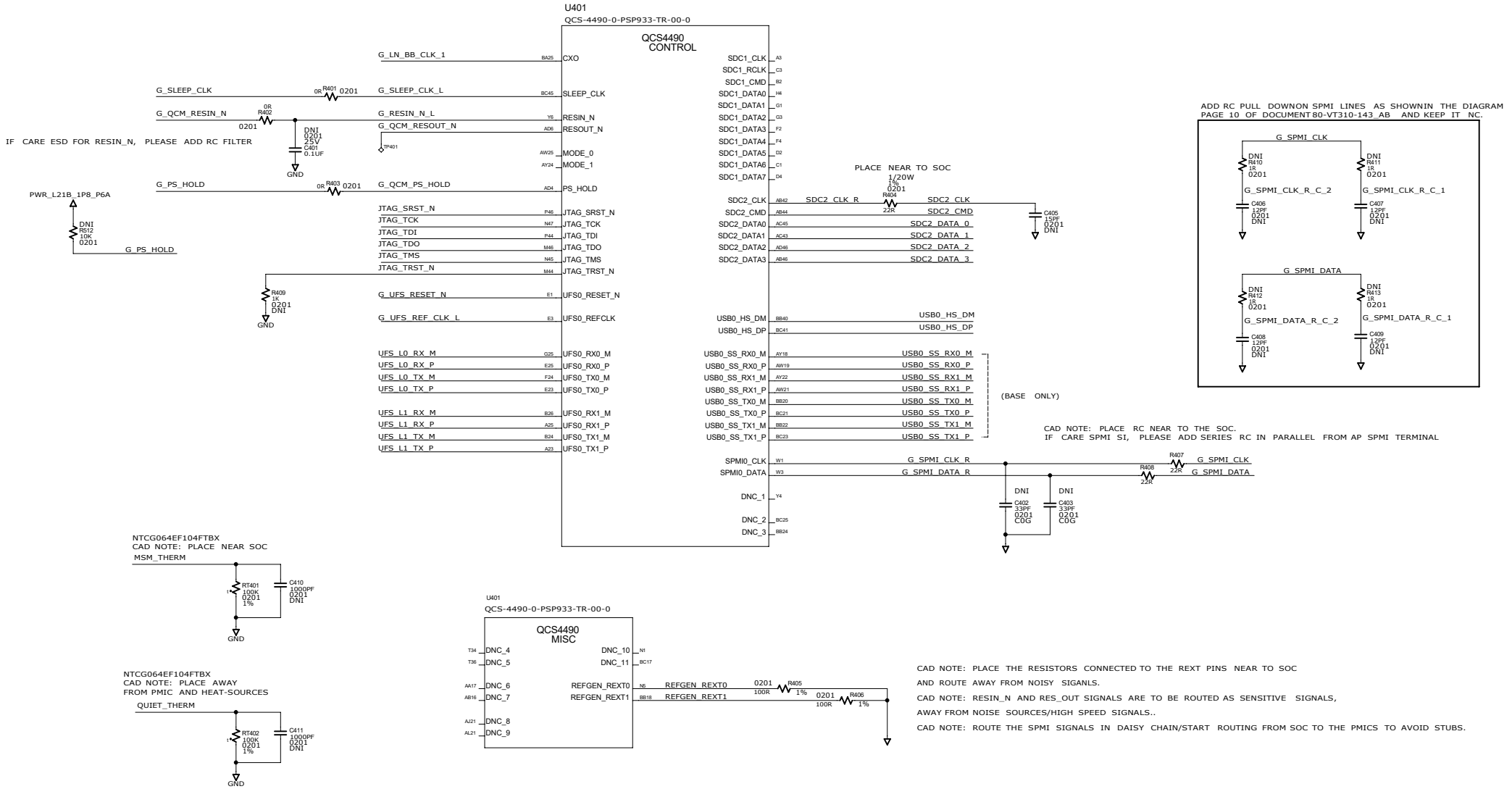

ZEBRA CONFIDENTIAL

ZEBRA TECHNOLOGIES CORP.
HOLTSVILLE, NEW YORK 11742

$STI_TITLE_1
QCS4490:CONTROL

SIZE	DWG. NO.	REV
D	$STI_DRAWING_NO	$STI_REV

$CON_LAST_MODIFIED $CONTENTS_OF_PAGES

QCS4490:GPIOS

REV	ZONE		DESCRIPTION	E.C.	BY	APVD.	DATE
			SEE SHEET 1				

U401
QCS-4490-0-PSP933-TR-00-0

QCS4490 GPIO1

(FOR SECURE ELEMENT)	NFC_ESE_SPI_MISO	J47	GPIO_0	GPIO_37	AE1	G_CAM_MCLK1
	NFC_ESE_SPI_MOSI	H46	GPIO_1	GPIO_38	AC3	LCM_1P8_EN
	NFC_ESE_SPI_SCLK	L47	GPIO_2	GPIO_39	AB2	BT_EN
	NFC_ESE_SPI_CS_N	K46	GPIO_3	GPIO_40	AC5	CAM0_RESET_N
	I2C_NFC_RTC_SDA	AF44	GPIO_4	GPIO_41	AB6	CAM1_RESET_N
	I2C_NFC_RTC_SCL	AD44	GPIO_5	GPIO_42	AB4	4490_GPIO_42 (NOT USED)
	NFC_EN	AK44	GPIO_6	GPIO_43	AA1	WLAN_EN
	NFC_CLK_REQ	AK46	GPIO_7	GPIO_44	AF8	I2C_FRONTCAM_SDA
	I2C_BATT_SDA	AL43	GPIO_8	GPIO_45	AE5	I2C_FRONTCAM_SCL
	I2C_BATT_SCL	AK42	GPIO_9	GPIO_46	AF4	I2C_REARCAM_SDA
	I2C_TS_SDA	AL47	GPIO_10	GPIO_47	AE3	I2C_REARCAM_SCL
	I2C_TS_SCL	AM46	GPIO_11	GPIO_48	AD2	NFC_SE_RST
	TS_RESET_N	AM44	GPIO_12	GPIO_49	AC1	4490_GPIO_49 (NOT USED)
	TS_INT_N	AM42	GPIO_13	GPIO_50	AJ43	SEL0_OTG
	BT_UART_CTS	AN47	GPIO_14	GPIO_51	AH42	SEL1_OTG
	BT_UART_RFR	AP46	GPIO_15	GPIO_52	AU13	PM8010_INT_1
	BT_UART_TX	AL45	GPIO_16	GPIO_53	G47	KEY_VOLUME_UP ==> F1
	BT_UART_RX	AP44	GPIO_17	GPIO_54	BC13	DETECT_R_CPU
RUGGED I/O UART	UART_CTS	AN43	GPIO_18	GPIO_55	BB12	DETECT_L_CPU
	UART_RFR	AP42	GPIO_19	GPIO_56	BB14	WCN_SW_CTRL
	UART_TX	AR43	GPIO_20	GPIO_57	AY14	USBIN_L_DET
	UART_RX	AT42	GPIO_21	GPIO_58	AW13	ALSP_INT_N
	DBG_UART_TX	AD42	GPIO_22	GPIO_59	E45	ACCEL_GYRO_DRDY_INT
	DBG_UART_RX	AE43	GPIO_23	GPIO_60	BB26	DCIN_R_DET
	I2C_APPS_SDA	AH46	GPIO_24	GPIO_61	AW47	ACCEL_GYRO_EVENT_INT
	I2C_APPS_SCL	AJ47	GPIO_25	GPIO_62	E47	DCIN_L_DET
	NFC_DWL_REQ	AG45	GPIO_26	GPIO_63	AR47	MUX_ENABLE_L*
	NFC_INT	AH44	GPIO_27	GPIO_64	AU47	MUX_ENABLE_R*
F2 <==	KEY_VOL_DOWN_N	BC11	GPIO_28	GPIO_65	AT46	SEL1_L
	PM8010_1_RESET_N	BC9	GPIO_29	GPIO_66	AV42	SEL2_L
	TS_ANALOG_EN	BA9	GPIO_30	GPIO_67	AT44	SEL3_L
	PCIE0_WAKE_N	AG43	GPIO_31	GPIO_68	AU43	DETECT_ACC_L_EN_N
	PCIE0_RESET_N	AF42	GPIO_32	GPIO_69	AR45	SEL5_L
	DISPLAY_ID0	AG47	GPIO_33	GPIO_70	AU45	KEYPAD_BL_EN*
	HOST2WLAN_SOL	AE47	GPIO_34	GPIO_71	BB46	4490_GPIO_71 (NOT USED)
	WLAN2HOST_SOL	AF46	GPIO_35	GPIO_72	BA47	4490_GPIO_72 (NOT USED) TP501
	G_CAM_MCLK0	AF2	GPIO_36	GPIO_73	BB44	4490_GPIO_73 (NOT USED)

U401
QCS-4490-0-PSP933-TR-00-0

QCS4490 GPIO2

(NOT USED)	4490_GPIO_74	BC43	GPIO_74	GPIO_108	BA11	KYPD_RST_QCS — 0201 R501 0R — KYPD_RST
	PA_MUTING	BA41	GPIO_75	GPIO_109	T2	G_WCD_SWR_TX_CLK
	MOS_AS_EN	BA43	GPIO_76	GPIO_110	R1	G_WCD_SWR_TX_DATA0
	LAA_RX	AY42	GPIO_77	GPIO_111	P2	G_WCD_SWR_TX_DATA1
(NOT USED)	4490_GPIO_78	AW43	GPIO_78	GPIO_112	P4	G_WCD_SWR_RX_CLK
	4490_GPIO_79	AY40	GPIO_79	GPIO_113	P6	G_WCD_SWR_RX_DATA0
	4490_GPIO_80	AW41	GPIO_80	GPIO_114	M2	G_WCD_SWR_RX_DATA1
	4490_GPIO_81	AW27	GPIO_81	GPIO_115	Y2	SM_DMIC01_CLK (NOT USED)
	UART_SWITCH_CTRL_1	AV46	GPIO_82	GPIO_116	V2	SM_DMIC01_DATA
	HW_TRIG_L_PTT_L_1P8	AY26	GPIO_83	GPIO_117	U5	G_SM_DMIC2_CLK
	HW_TRIG_R_PTT_R_1P8	BA27	GPIO_84	GPIO_118	T6	G_SM_DMIC2_DATA
	HEADSET_DET_N	AY28	GPIO_85	GPIO_119	M4	3V3_PWR_L_EN
	DETECT_ACC_R_EN_N	BC27	GPIO_86	GPIO_120	M6	SEL1_R
	SEL5_R	BC29	GPIO_87	GPIO_121	R3	USBIN_R_DET
	LED_SOFT_KEY*	AW29	GPIO_88	GPIO_122	R5	SCAP_RST
	OTG_OUT_EN	BB28	GPIO_89	GPIO_123	N3	4490_GPIO_123 (NOT USED)
	I2C_FREE_SCL	AA6	GPIO_90	GPIO_124	V4	RF_45_BT_SLIMBUS_CLK
(NOT USED)	I2C_FREE_SDA	W5	GPIO_91	GPIO_125	V6	RF_45_BT_SLIMBUS_DATA
	DISP0_RESET_N	B46	GPIO_92	GPIO_126	T4	VIBRATOR
	BATT_PRESENCE_SM	D46	GPIO_93	GPIO_127	U1	SEL2_R
	USB0_CC_DIR	BA45	GPIO_94	GPIO_128	J3	I3C_ACCELANDGYRO_SDA
F3 <==	PTT_TRIG	AV44	GPIO_95	GPIO_129	J1	I3C_ACCELANDGYRO_SCL
	WCD_RESET_N	AY10	GPIO_96	GPIO_130	K4	I2C_ALPSANDPRESS_SDA
(NOT USED)	4490_GPIO_97	AU41	GPIO_97	GPIO_131	K6	I2C_ALPSANDPRESS_SCL
	BB_VOLTAGE_DET	AV40	GPIO_98	GPIO_132	L5	BLE_UART_TX
(NOT USED)	4490_GPIO_99	AY44	GPIO_99	GPIO_133	L3	BLE_UART_RX
	SEL3_R	AY46	GPIO_100	GPIO_134	K2	USB_MUX_EN_N
(NOT USED)	4490_GPIO_101	F46	GPIO_101	GPIO_135	L1	3V3_PWR_R_EN
	DISPLAY_TE*	J45	GPIO_102			
	FORCED_USB_BOOT	H44	GPIO_103			
TP503	GLOBAL_GPIO_EN	F44	GPIO_104			
	KYPD_INT	AW45	GPIO_105			
(NOT USED)	USB_SS_REDRI_PWR_EN	BB10	GPIO_106			
	PCIE0_CLK_REQ_N	AV14	GPIO_107			

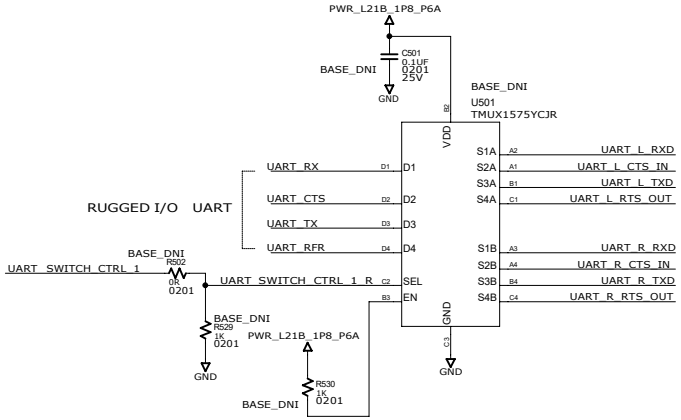

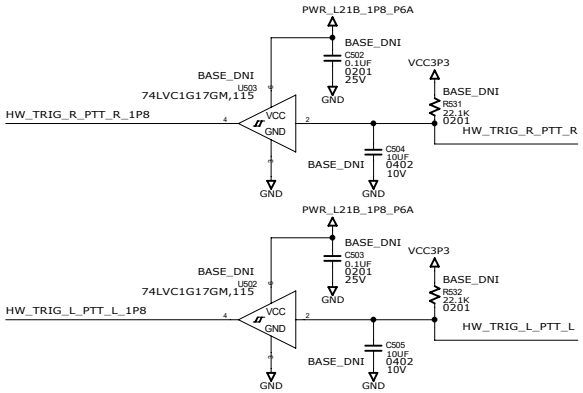

ZEBRA CONFIDENTIAL

ZEBRA TECHNOLOGIES CORP.
HOLTSVILLE, NEW YORK 11742

$STI_TITLE_1
QCS4490:GPIOS

SIZE	DWG. NO.	REV
D	$STI_DRAWING_NO	$STI_REV

$CON_LAST_MODIFIED $CONTENT_TOTAL_PAGES

QCS4490:I2C PULL UPS

REVISIONS							
REV	ZONE	ECN	DESCRIPTION	E.C.	BY	APVD.	DATE
			SEE SHEET 1				

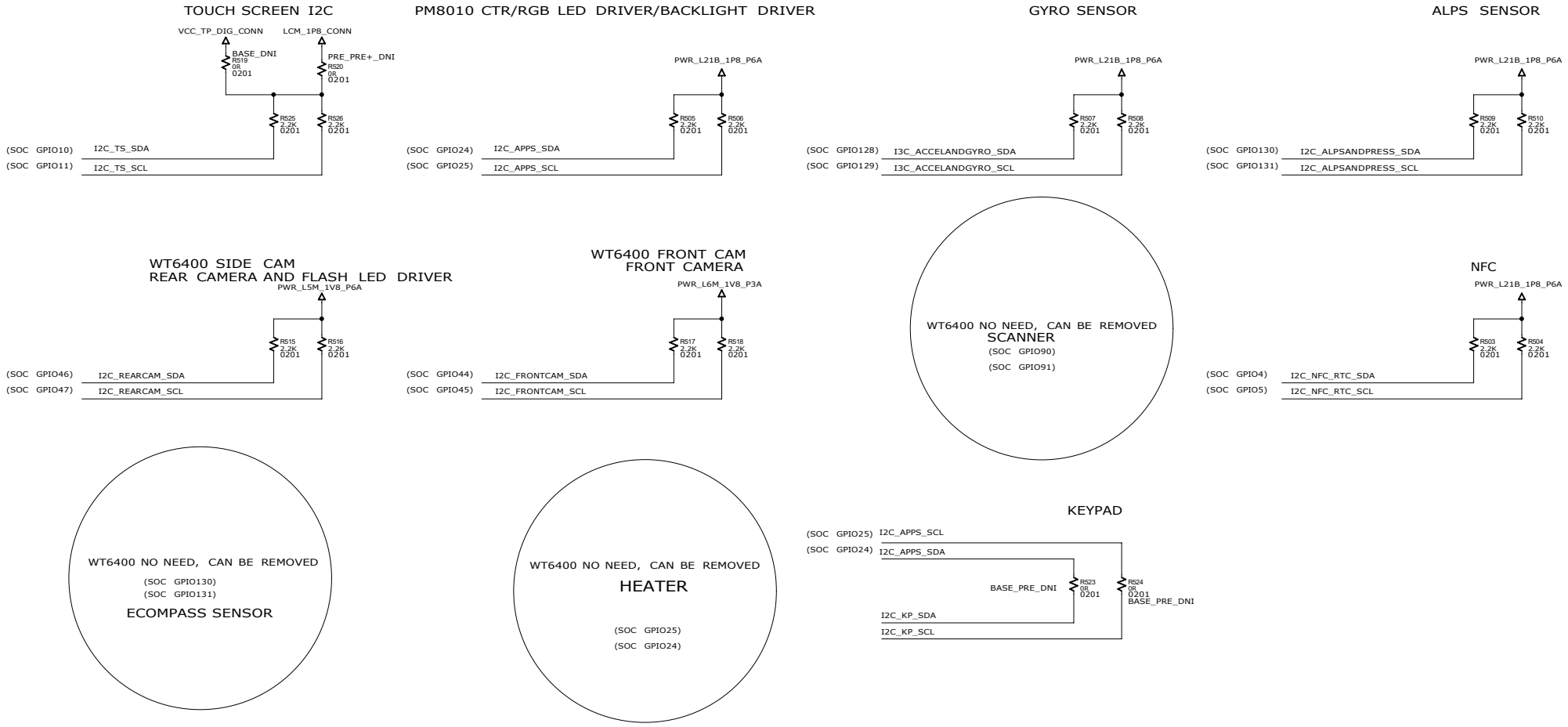

ZEBRA CONFIDENTIAL

ZEBRA TECHNOLOGIES CORP.
HOLTSVILLE, NEW YORK 11742

$STI_TITLE_1
QCS4490:I2C PULL UPS

SIZE	DWG. NO.	REV
D	$STI_DRAWING_NO	$STI_REV

$CON_LAST_MODIFIED $CONTENT_TOTAL_PAGES

QCS4490:DSI/CSI/PCIE

REVISIONS							
REV	ZONE	ECN	DESCRIPTION	E.C.	BY	APVD.	DATE
			SEE SHEET 1				

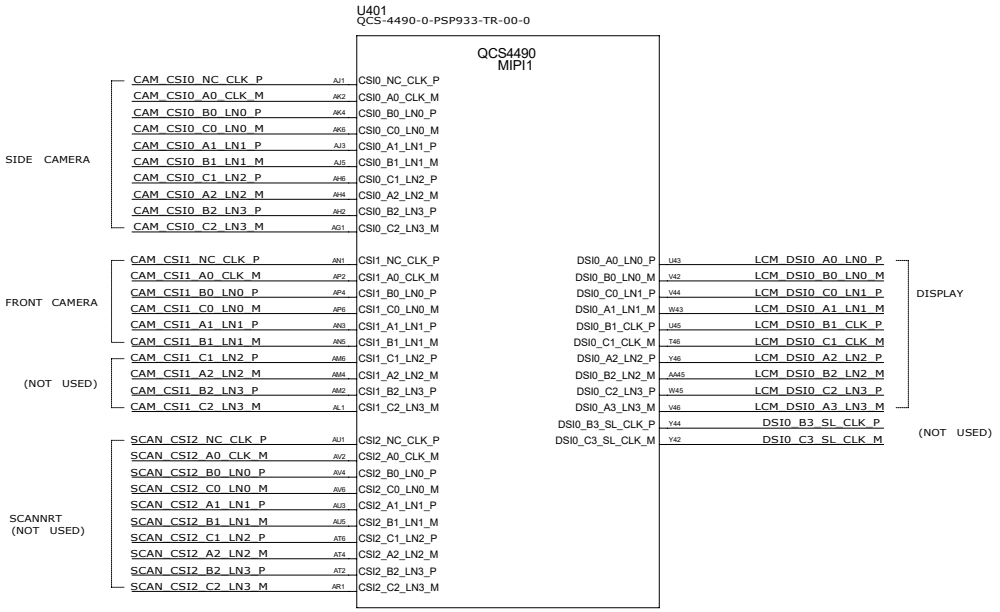

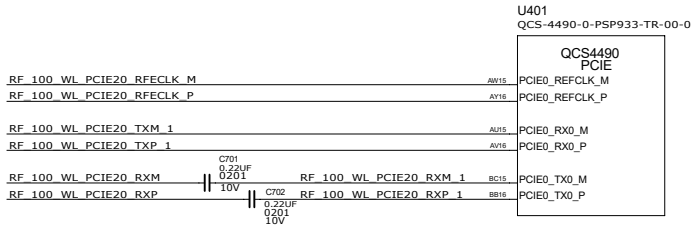

ZEBRA CONFIDENTIAL

ZEBRA TECHNOLOGIES CORP.
HOLTSVILLE, NEW YORK 11742

$STI_TITLE_1
QCS4490:DSI/CSI/PCIE

SIZE	DWG. NO.	REV
D	$STI_DRAWING_NO	$STI_REV

$CON_LAST_MODIFIED $CONTENT_TOTAL_PAGES

QCS4490:RF QLINK INTERFACE

REVISIONS							
REV	ZONE	ECN	DESCRIPTION	E.C.	BY	APVD.	DATE
			SEE SHEET 1				

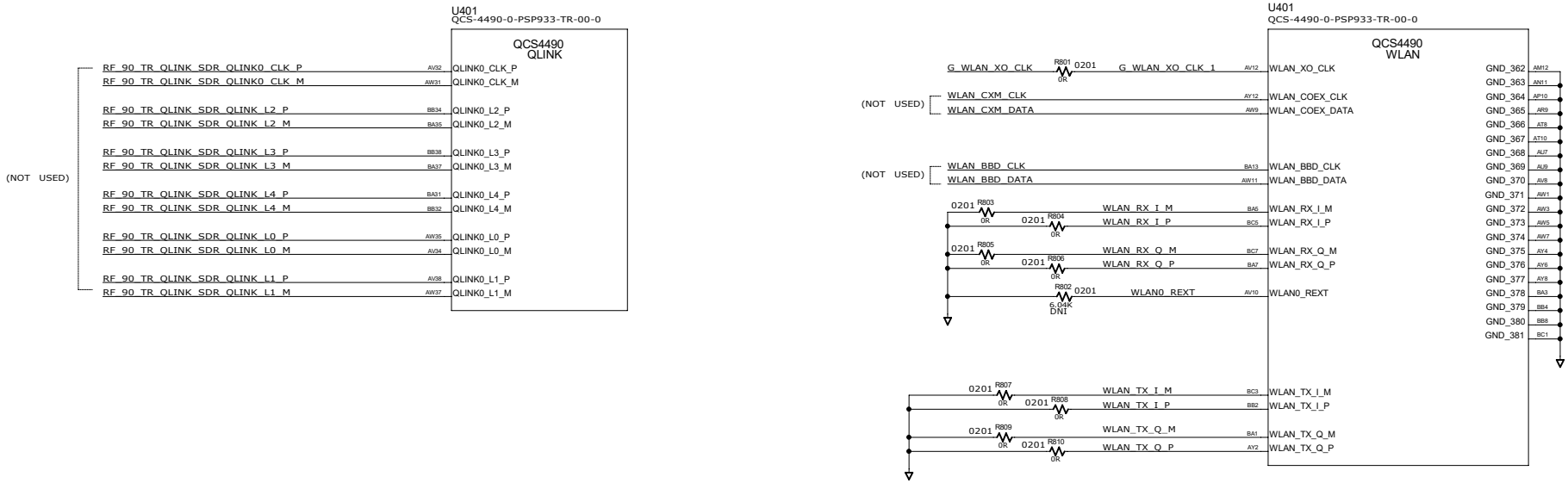

ZEBRA CONFIDENTIAL

ZEBRA TECHNOLOGIES CORP.
HOLTSVILLE, NEW YORK 11742

$STI_TITLE_1
QCS4490:QLINK

SIZE	DWG. NO.	REV
D	$STI_DRAWING_NO	$STI_REV

$CON_LAST_MODIFIED $CONTROLLED BY $CURRENT DATE $TOTAL PAGES

QCS4490 EBI0/1

REVISIONS							
REV	ZONE	ECN	DESCRIPTION	E.C.	BY	APVD.	DATE
			SEE SHEET 1				

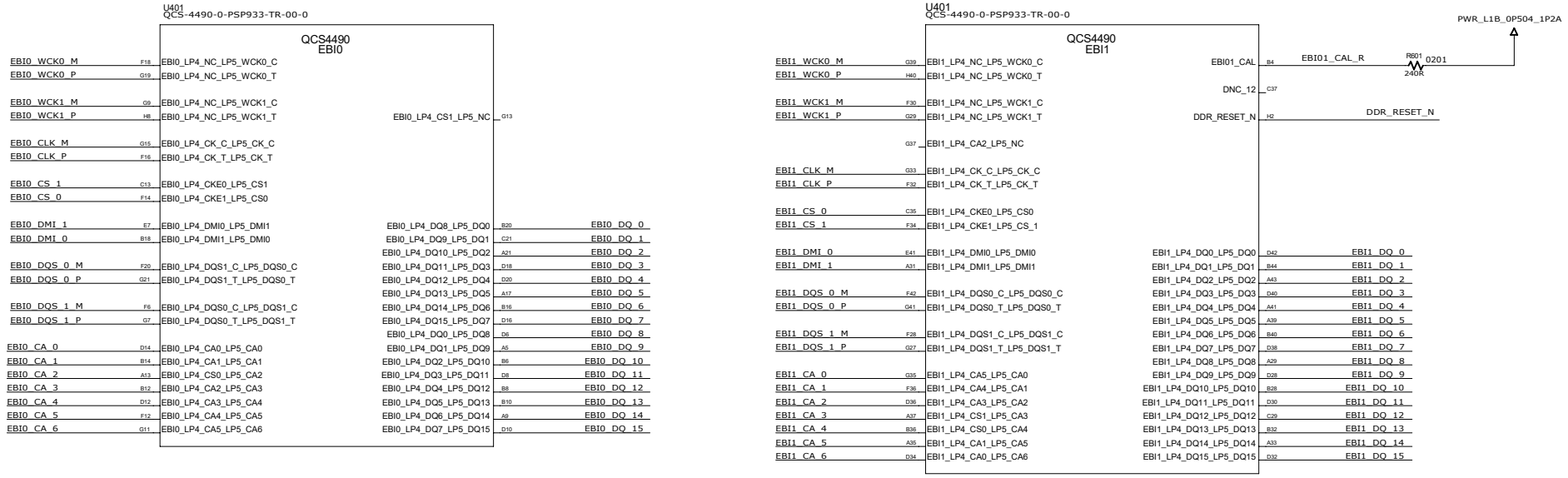

ZEBRA CONFIDENTIAL

ZEBRA TECHNOLOGIES CORP.
HOLTSVILLE, NEW YORK 11742

$STI_TITLE_1
QCS4490:EBI0/1

SIZE	DWG. NO.	REV
D	$STI_DRAWING_NO	$STI_REV

$CON_LAST_MODIFIED $CONTENT_TOTAL_PAGES

QCS4490:PWR1

REVISIONS							
REV	ZONE	ECN	DESCRIPTION	E.C.	BY	APVD.	DATE
			SEE SHEET 1				

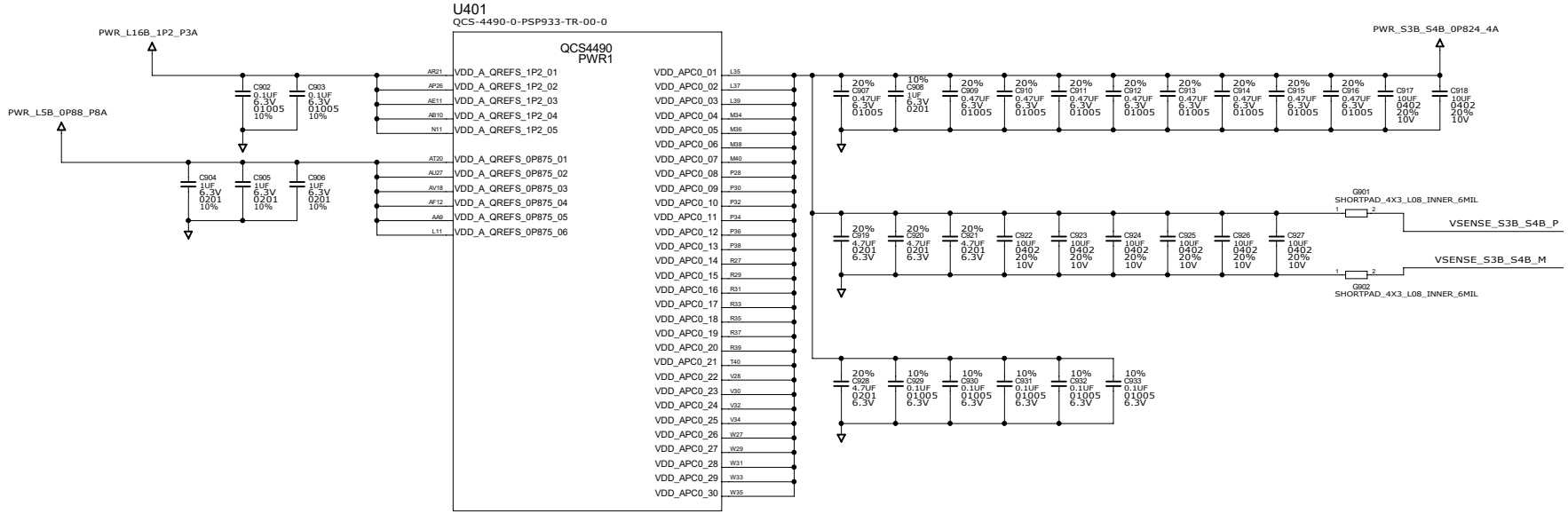

ZEBRA CONFIDENTIAL

ZEBRA TECHNOLOGIES CORP.
HOLTSVILLE, NEW YORK 11742

$STI_TITLE_1
QCS44990:POWER

SIZE	DWG. NO.	REV
D	$STI_DRAWING_NO	$STI_REV

$CON_LAST_MODIFIED $CON_SHEET OF $CON_TOTAL_PAGES

QCS4490:PWR2

REV	ZONE		REVISIONS DESCRIPTION	E.C.	BY	APVD.	DATE
			SEE SHEET 1				

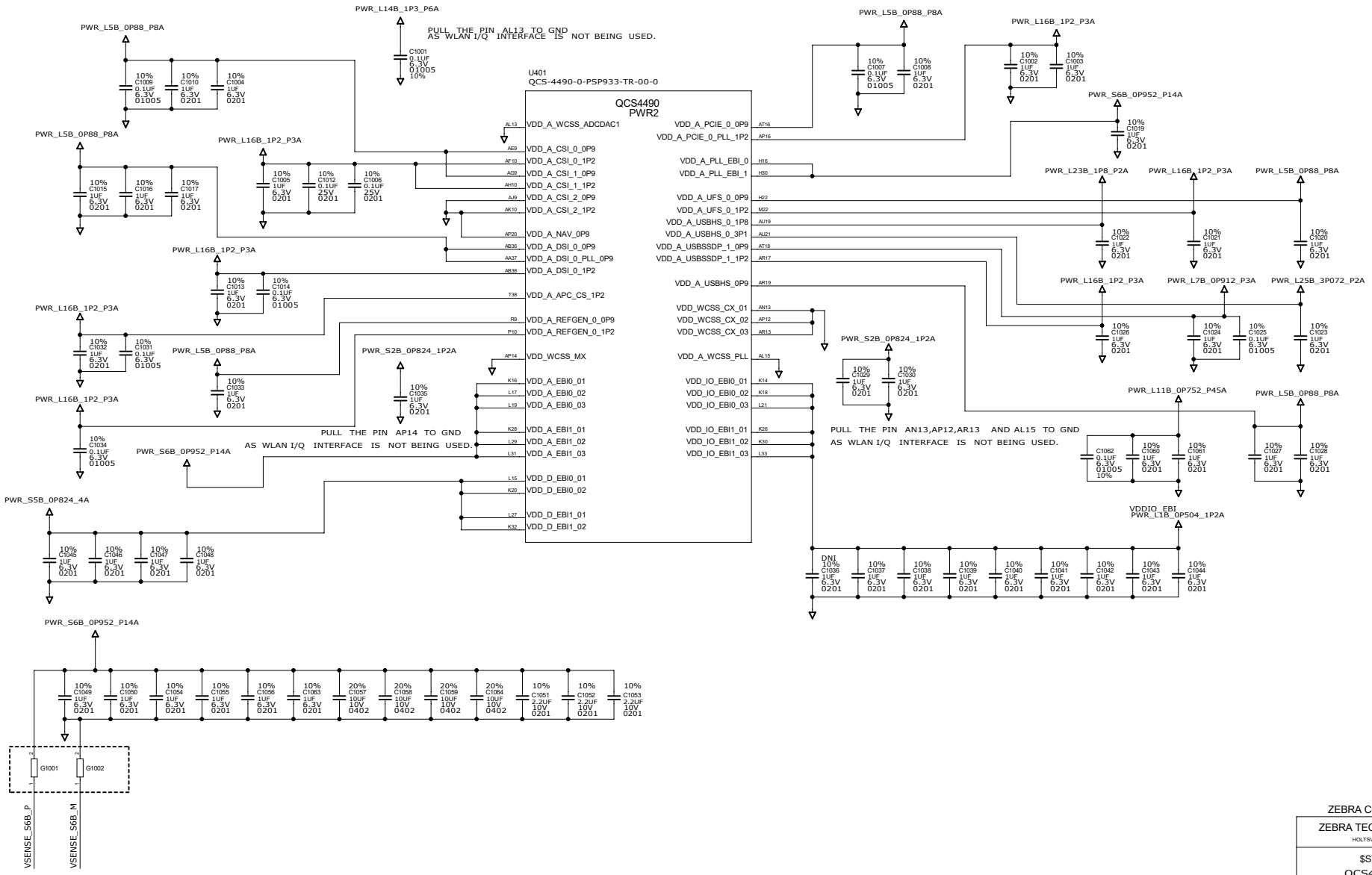

ZEBRA CONFIDENTIAL

ZEBRA TECHNOLOGIES CORP.
HOLTSVILLE, NEW YORK 11742

$STI_TITLE_1
QCS4490:POWER

SIZE	DWG. NO.	REV
D	$STI_DRAWING_NO	$STI_REV

$CON_LAST_MODIFIED $CONTENT_TOTAL_PAGES

QCS4490:PWR3

REVISIONS							
REV	ZONE	ECN	DESCRIPTION	E.C.	BY	APVD.	DATE
			SEE SHEET 1				

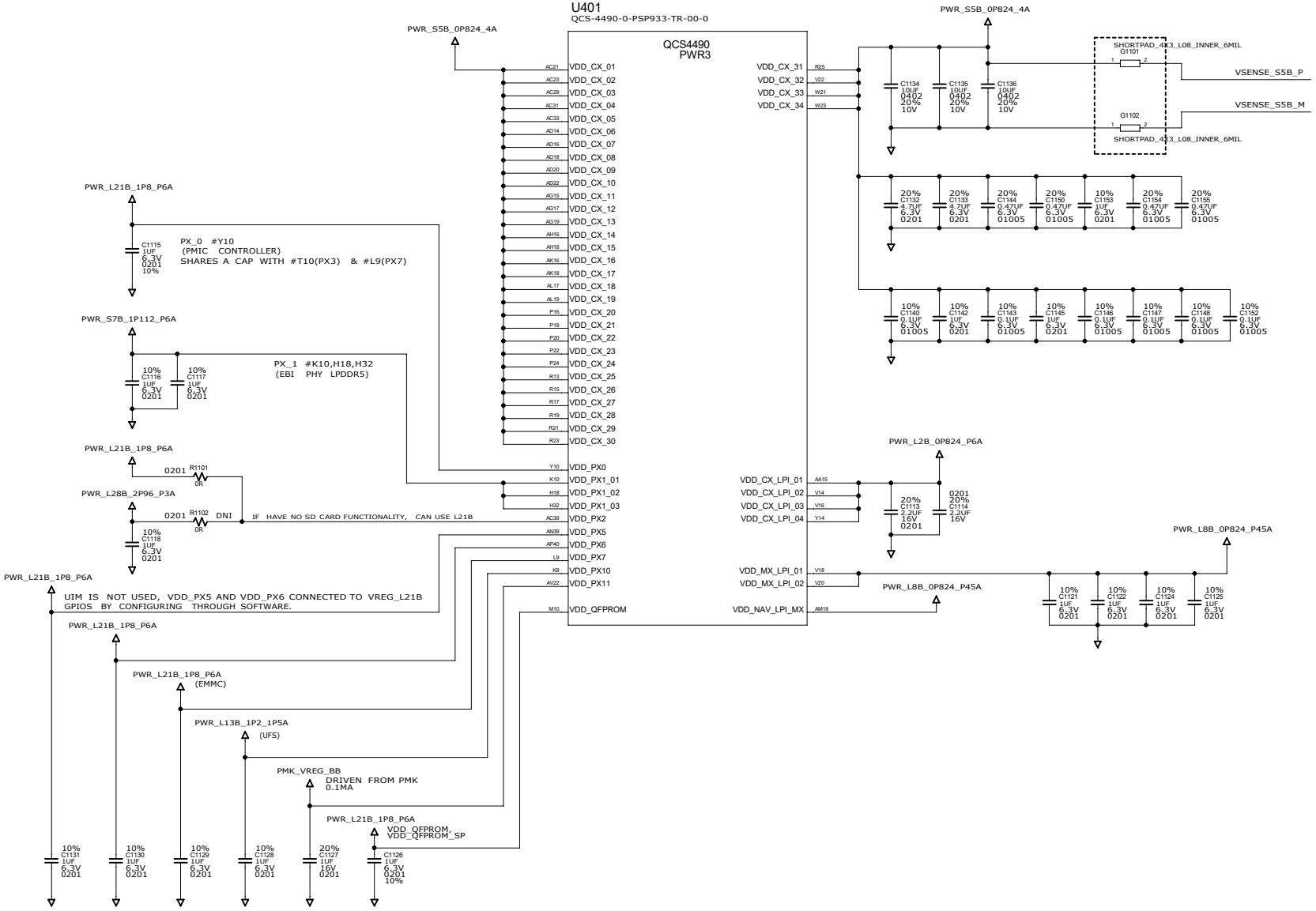

ZEBRA CONFIDENTIAL

ZEBRA TECHNOLOGIES CORP.
HOLTSVILLE, NEW YORK 11742

$STI_TITLE_1
QCS4490:POWER

SIZE	DWG. NO.	REV
D	$STI_DRAWING_NO	$STI_REV

$CON_LAST_MODIFIED $CON_CURRENT_DATE $CON_TOTAL_PAGES

REVISIONS							
REV	ZONE	ECN	DESCRIPTION	E.C.	BY	APVD.	DATE
			SEE SHEET 1				

QCM/QCS4490 PWR4

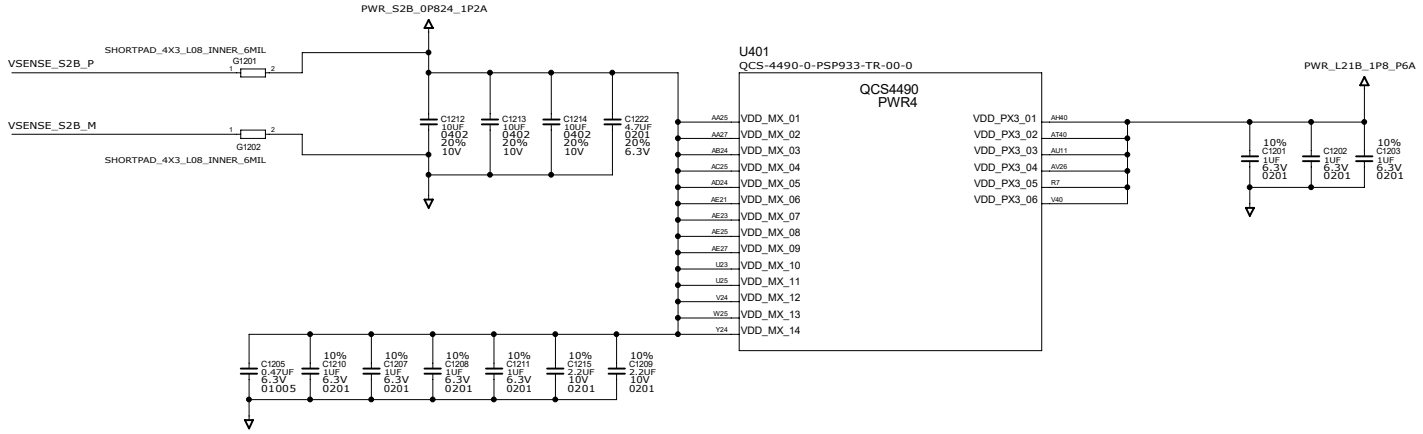

QCM/QCS4490 PWR5

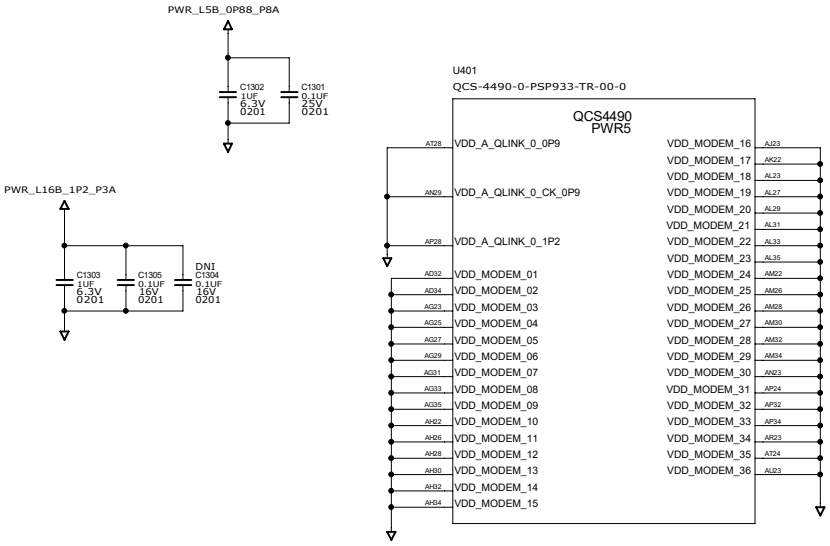

ZEBRA CONFIDENTIAL

ZEBRA TECHNOLOGIES CORP.
HOLTSVILLE, NEW YORK 11742

$STI_TITLE_1
QCS4490:POWER

SIZE	DWG. NO.	REV
D	$STI_DRAWING_NO	$STI_REV

$CON_LAST_MODIFIED $CON_SHEET OF $CON_TOTAL_PAGES

QCS4490:GND

REVISIONS							
REV	ZONE	ECN	DESCRIPTION	E.C.	BY	APVD.	DATE
			SEE SHEET 1				

U401
QCS-4490-0-PSP933-TR-00-0

QCS4490
VSS1

A1	GND_001	GND_051	AE45
A7	GND_002	GND_052	AF8
A11	GND_003	GND_053	AF16
A15	GND_004	GND_054	AF18
A19	GND_005	GND_055	AF20
A27	GND_006	GND_056	AF22
A45	GND_007	GND_057	AF24
A47	GND_008	GND_058	AF26
AA3	GND_009	GND_059	AF28
AA7	GND_010	GND_060	AF30
AA11	GND_011	GND_061	AF32
AA13	GND_012	GND_062	AF34
AA19	GND_013	GND_063	AF36
AA21	GND_014	GND_064	AF38
AA23	GND_015	GND_065	AG3
AA39	GND_016	GND_066	AG5
AA41	GND_017	GND_067	AG7
AA43	GND_018	GND_068	AG11
AB12	GND_019	GND_069	AG13
AB14	GND_020	GND_070	AG21
AB18	GND_021	GND_071	AG37
AB20	GND_022	GND_072	AG39
AB22	GND_023	GND_073	AG41
AB26	GND_024	GND_074	AH8
AB28	GND_025	GND_075	AH12
AB30	GND_026	GND_076	AH20
AB32	GND_027	GND_077	AH24
AB34	GND_028	GND_078	AH36
AC9	GND_029	GND_079	AH38
AC11	GND_030	GND_080	AJ7
AC13	GND_031	GND_081	AJ11
AC15	GND_032	GND_082	AJ15
AC17	GND_033	GND_083	AJ17
AC19	GND_034	GND_084	AJ19
AC27	GND_035	GND_085	AJ25
AC37	GND_036	GND_086	AJ27
AC41	GND_037	GND_087	AJ29
AD8	GND_038	GND_088	AJ31
AD10	GND_039	GND_089	AJ33
AD12	GND_040	GND_090	AJ37
AD26	GND_041	GND_091	AJ39
AD28	GND_042	GND_092	AJ41
AD30	GND_043	GND_093	AJ45
AD36	GND_044	GND_094	AK8
AD38	GND_045	GND_095	AK20
AE7	GND_046	GND_096	AK24
AE13	GND_047	GND_097	AK26
AE37	GND_048	GND_098	AK28
AE39	GND_049	GND_099	AK30
AE41	GND_050	GND_100	AK32

GND GND

U401
QCS-4490-0-PSP933-TR-00-0

QCS4490
VSS2

AK34	GND_101	GND_151	AU29
AK36	GND_102	GND_152	AU31
AK38	GND_103	GND_153	AU33
AL3	GND_104	GND_154	AU35
AL5	GND_105	GND_155	AU37
AL7	GND_106	GND_156	AU39
AL9	GND_107	GND_157	AV20
AL11	GND_108	GND_158	AV24
AL25	GND_109	GND_159	AV28
AL37	GND_110	GND_160	AV30
AL39	GND_111	GND_161	AV36
AL41	GND_112	GND_162	AW17
AM8	GND_113	GND_163	AW23
AM10	GND_114	GND_164	AW33
AM14	GND_115	GND_165	AW39
AM16	GND_116	GND_166	AY20
AM20	GND_117	GND_167	AY30
AM24	GND_118	GND_168	AY32
AM36	GND_119	GND_169	AY34
AM38	GND_120	GND_170	AY36
AN7	GND_121	GND_171	AY38
AN15	GND_122	GND_172	B22
AN25	GND_123	GND_173	B30
AN27	GND_124	GND_174	B34
AN31	GND_125	GND_175	B38
AN33	GND_126	GND_176	B42
AN35	GND_127	GND_177	BA15
AN37	GND_128	GND_178	BA17
AN41	GND_129	GND_179	BA19
AN45	GND_130	GND_180	BA21
AP30	GND_131	GND_181	BA23
AP36	GND_132	GND_182	BA29
AP38	GND_133	GND_183	BA33
AR3	GND_134	GND_184	BA39
AR5	GND_135	GND_185	BB30
AR7	GND_136	GND_186	BB36
AR15	GND_137	GND_187	BB42
AR25	GND_138	GND_188	BC19
AR31	GND_139	GND_189	BC31
AR35	GND_140	GND_190	BC33
AR37	GND_141	GND_191	BC35
AR39	GND_142	GND_192	BC37
AR41	GND_143	GND_193	BC39
AT12	GND_144	GND_194	BC47
AT14	GND_145	GND_195	C5
AT34	GND_146	GND_196	C7
AT36	GND_147	GND_197	C9
AT38	GND_148	GND_198	C11
AU17	GND_149	GND_199	C15
AU25	GND_150	GND_200	C17

GND GND

U401
QCS-4490-0-PSP933-TR-00-0

QCS4490
VSS3

C19	GND_201	GND_251	J7
C23	GND_202	GND_252	J11
C25	GND_203	GND_253	J13
C27	GND_204	GND_254	J15
C31	GND_205	GND_255	J17
C33	GND_206	GND_256	J19
C39	GND_207	GND_257	J21
C41	GND_208	GND_258	J23
C43	GND_209	GND_259	J25
C45	GND_210	GND_260	J27
C47	GND_211	GND_261	J29
D22	GND_212	GND_262	J31
D24	GND_213	GND_263	J33
D26	GND_214	GND_264	J35
D44	GND_215	GND_265	J37
E5	GND_216	GND_266	J39
E9	GND_217	GND_267	J41
E11	GND_218	GND_268	K12
E13	GND_219	GND_269	K22
E17	GND_220	GND_270	K24
E19	GND_221	GND_271	K34
E29	GND_222	GND_272	K36
E31	GND_223	GND_273	K38
E35	GND_224	GND_274	K40
E37	GND_225	GND_275	K42
E39	GND_226	GND_276	K44
E43	GND_227	GND_277	L13
F10	GND_228	GND_278	L25
F22	GND_229	GND_279	L41
F26	GND_230	GND_280	L45
F38	GND_231	GND_281	M24
G5	GND_232	GND_282	M42
G17	GND_233	GND_283	N13
G23	GND_234	GND_284	N15
G31	GND_235	GND_285	N17
G43	GND_236	GND_286	N19
G45	GND_237	GND_287	N21
H6	GND_238	GND_288	N23
H10	GND_239	GND_289	N25
H12	GND_240	GND_290	N27
H14	GND_241	GND_291	N29
H20	GND_242	GND_292	N31
H24	GND_243	GND_293	N33
H26	GND_244	GND_294	N35
H28	GND_245	GND_295	N37
H34	GND_246	GND_296	N39
H36	GND_247	GND_297	N41
H38	GND_248	GND_298	P12
H42	GND_249	GND_299	P14
J5	GND_250	GND_300	P26

GND GND

U401
QCS-4490-0-PSP933-TR-00-0

QCS4490
VSS4

P40	GND_301	GND_336	V10
P42	GND_302	GND_337	V12
R11	GND_303	GND_338	V26
R41	GND_304	GND_339	V36
R43	GND_305	GND_340	W7
R45	GND_306	GND_341	W9
R47	GND_307	GND_342	W11
T10	GND_308	GND_343	W13
T12	GND_309	GND_344	W15
T14	GND_310	GND_345	W17
T16	GND_311	GND_346	W19
T18	GND_312	GND_347	W37
T20	GND_313	GND_348	W39
T22	GND_314	GND_349	W41
T24	GND_315	GND_350	Y12
T26	GND_316	GND_351	Y16
T28	GND_317	GND_352	Y18
T30	GND_318	GND_353	Y20
T32	GND_319	GND_354	Y22
T42	GND_320	GND_355	Y26
T44	GND_321	GND_356	Y28
U3	GND_322	GND_357	Y30
U7	GND_323	GND_358	Y32
U11	GND_324	GND_359	Y34
U13	GND_325	GND_360	Y36
U15	GND_326	GND_361	Y38
U17	GND_327		
U27	GND_328		
U29	GND_329		
U31	GND_330		
U33	GND_331		
U35	GND_332		
U37	GND_333		
U39	GND_334		
U41	GND_335		

GND GND

ZEBRA CONFIDENTIAL

ZEBRA TECHNOLOGIES CORP.
HOLTSVILLE, NEW YORK 11742

$STI_TITLE_1
QCS4490:GROUND

SIZE	DWG. NO.	REV
D	$STI_DRAWING_NO	$STI_REV

$CON_LAST_MODIFIED $CONTENT_TOTAL_PAGES

PMK4450

REV	ZONE		DESCRIPTION	E.C.	BY	APVD.	DATE
			SEE SHEET 1				

SPMI_CLK & SPMI_DATA SHOULD BE ROUTED AWAY FROM NOISY TRACES
ROUTE SIGNALS AS A DIFF PAIR AS MUCH AS POSSIBLE
IF CARE SPMI SI
PLEASE ADD SERIES RC IN PARALLEL FROM PMK TERMINAL

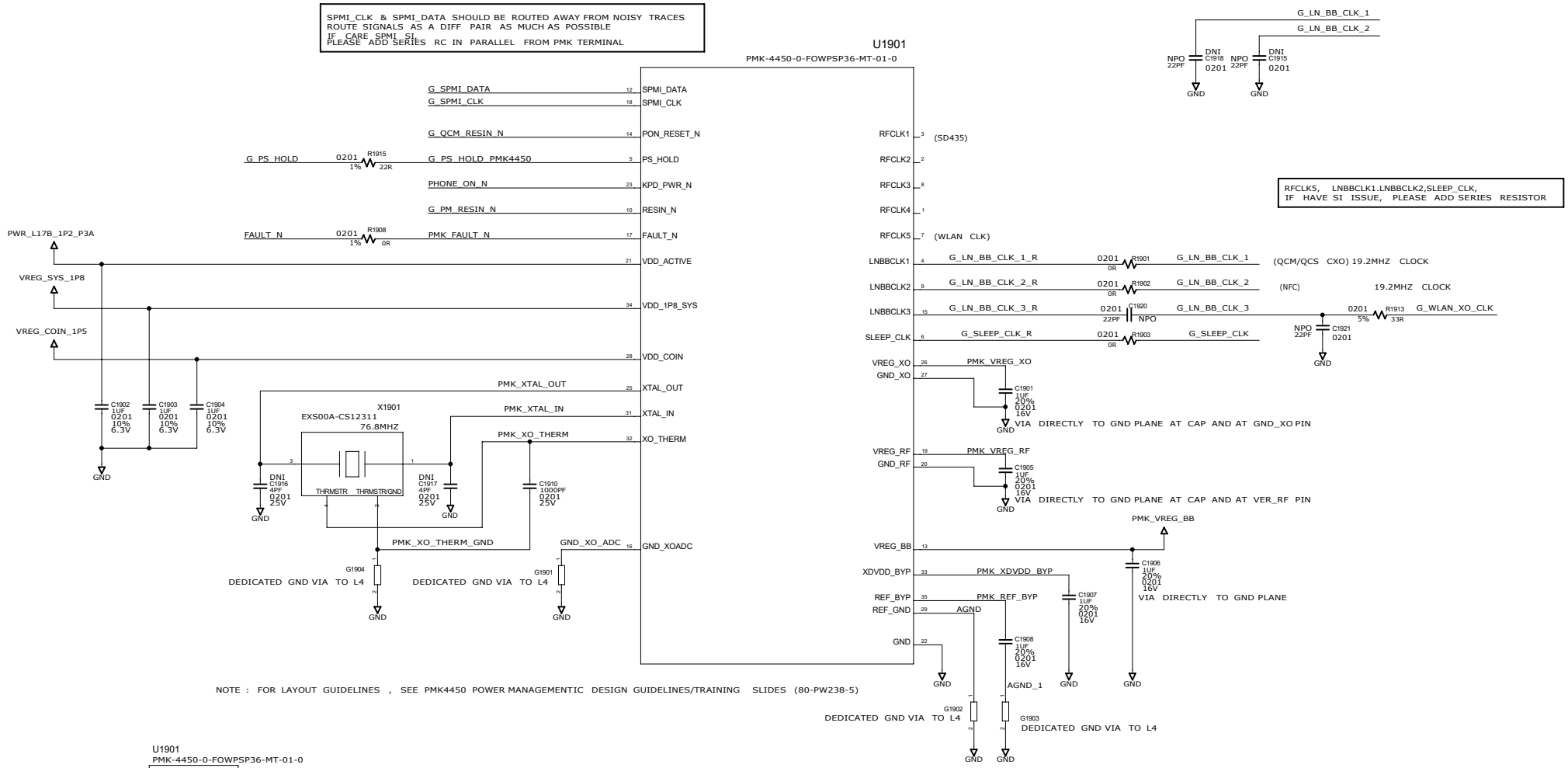

RFCLK5, LNBBCLK1.LNBBCLK2,SLEEP_CLK,
IF HAVE SI ISSUE, PLEASE ADD SERIES RESISTOR

NOTE : FOR LAYOUT GUIDELINES , SEE PMK4450 POWER MANAGEMENTIC DESIGN GUIDELINES/TRAINING SLIDES (80-PW238-5)

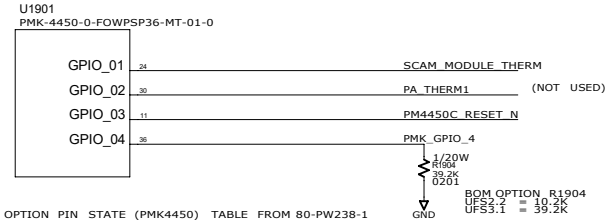

NOTE : REFER - OPTION PIN STATE (PMK4450) TABLE FROM 80-PW238-1

Options	Resistor values (Ω) [1]	LPDDR options	UFS option	SD card option
1	3240	LPDDR5	USF2.2	SD card LDO enabled
2	10200	LPDDR5	USF2.2	Skip SD Card LDO enable
3	18700	LPDDR5	USF2.2	SD card LDO enabled
4	28000	LPDDR5	USF2.2	Skip SD Card LDO enable
5	39200	LPDDR5	UFS3.1	SD card LDO enabled
6	52300	LPDDR5	UFS3.1	Skip SD Card LDO enable
7	68100	LPDDR5	UFS3.1	SD card LDO enabled
8	88700	LPDDR5	UFS3.1	Skip SD Card LDO enable

ZEBRA CONFIDENTIAL

ZEBRA TECHNOLOGIES CORP.
HOLTSVILLE, NEW YORK 11742

$STI_TITLE_1
PMK4450

SIZE	DWG. NO.	REV
D	$STI_DRAWING_NO	$STI_REV

$CON_LAST_MODIFIED $CON_TOTAL_PAGES

PM4450:CONTROL/GPIOS/GND

REVISIONS							
REV	ZONE	ECN	DESCRIPTION	E.C.	BY	APVD.	DATE
			SEE SHEET 1				

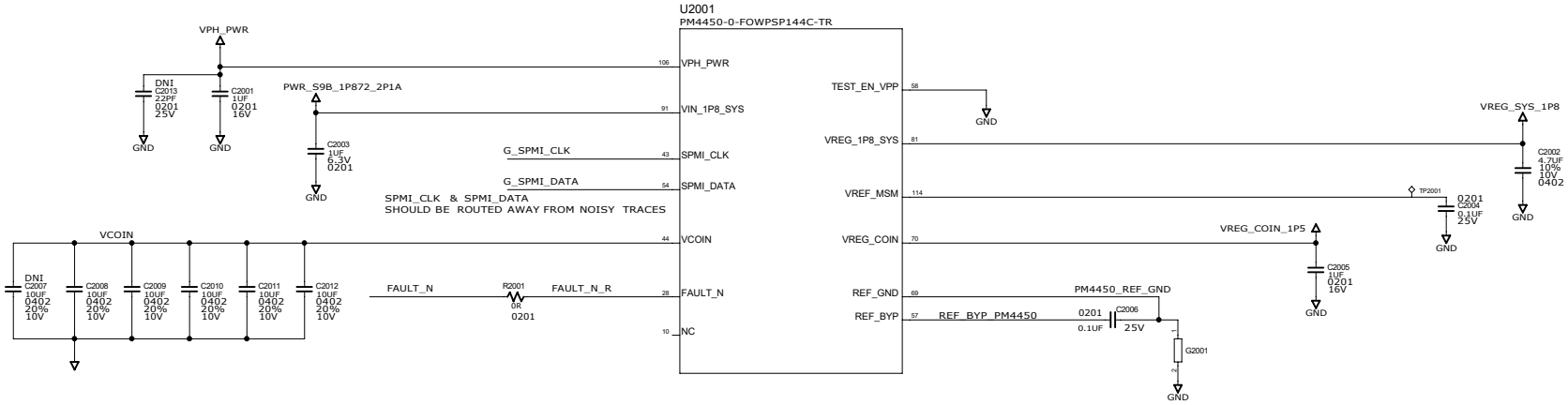

DEDICATED TRACE FROM REF_BYP TO CAP.
DEDICATED TRACE FROM REF_GND TO CAP.
DEDICATED VIA TO MAIN GROUND PLANE RIGHT UNDER PMIC PIN (REF_GND) OR AS CLOSE TO THE PIN AS POSSIBLE.
DO NOT ADD VIA AT CAP.
REF_BYP AND REF_GND SHOULD BE ROUTED AWAY FROM NOISY TRACES

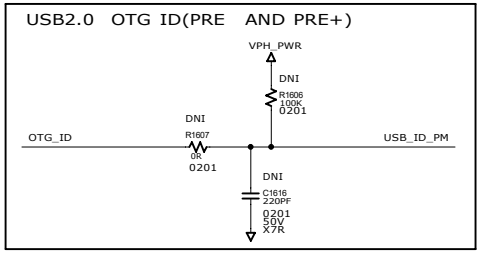

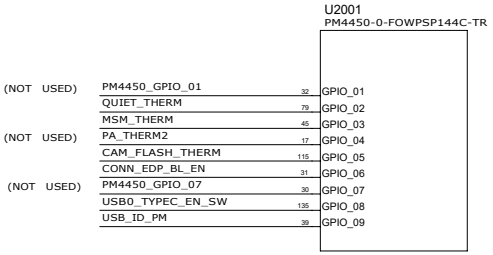

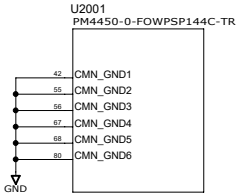

NOTE : FOR LAYOUT GUIDELINES , SEE PM4450 POWER MANAGEMENTIC DESIGN GUIDELINES/TRAINING SLIDES : 80-36266-5

ZEBRA CONFIDENTIAL

ZEBRA TECHNOLOGIES CORP.
HOLTSVILLE, NEW YORK 11742

$STI_TITLE_1
PM4450:CONTROL/GPIOS/GND

SIZE	DWG. NO.	REV
D	$STI_DRAWING_NO	$STI_REV

$CON_LAST_MODIFIED $CONTENTS OF PAGES

PM4450:SMPS1-4/VREG S1B-S4B

REVISIONS							
REV	ZONE	ECN	DESCRIPTION	E.C.	BY	APVD.	DATE
			SEE SHEET 1				

NOTE:0.47UH/HTQL20120H-R47MSR-39
CHANGE TO REF. DESIGN HTTH20121T-R47MSR

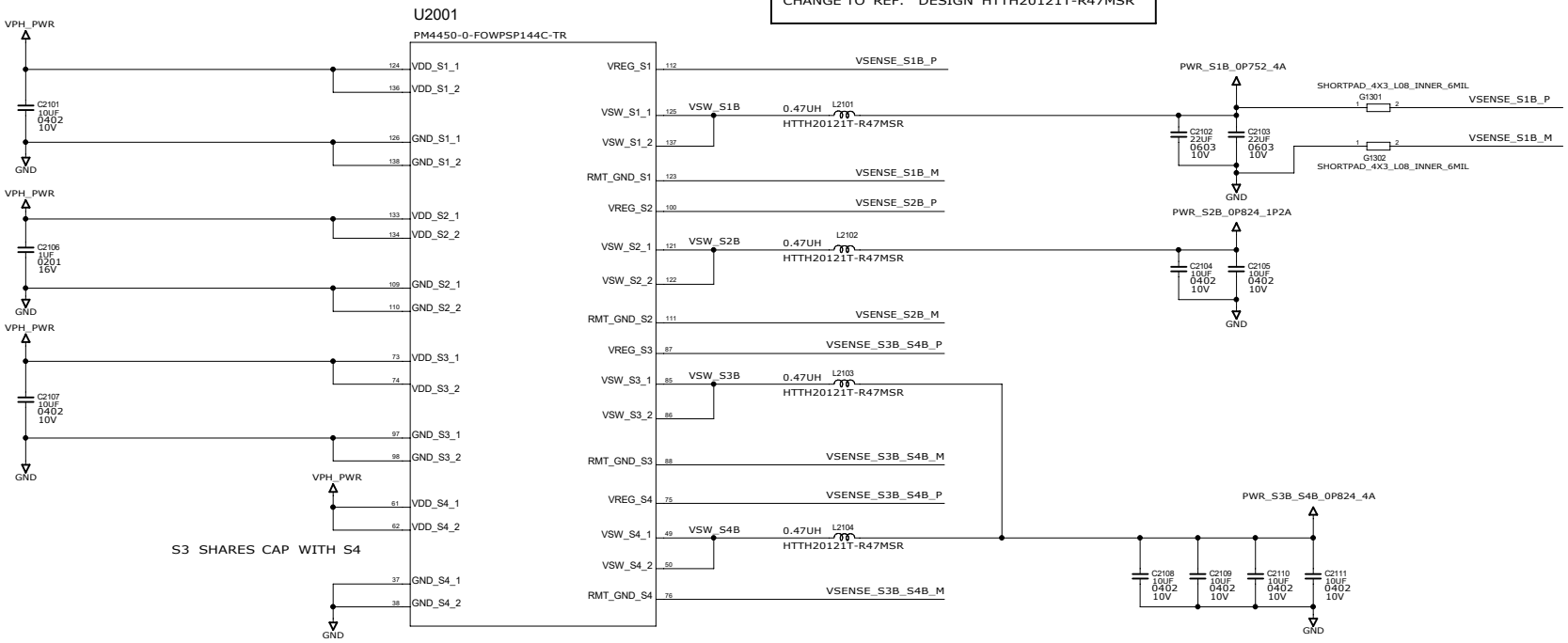

THE BUCK FEEDBACK LINES MUST E SHORTED UNDER THE PMIC FOR MULTI-PHASE BUCKS.
THE REFERENCE LAYOUT WILL NOT HAVE THIS SHORT UNDER THE PMIC; A GENERIC BREAKOUT.

ZEBRA CONFIDENTIAL

ZEBRA TECHNOLOGIES CORP.
HOLTSVILLE, NEW YORK 11742

$STI_TITLE_1
PM4450:S1-S4/S1B-S4B

SIZE	DWG. NO.	REV
D	$STI_DRAWING_NO	$STI_REV

$CON_LAST_MODIFIED $CONTENT_TOTAL_PAGES

PM4450:SMPS5-9/VREG S5B-S9B

REVISIONS							
REV	ZONE	ECN	DESCRIPTION	E.C.	BY	APVD.	DATE
			SEE SHEET 1				

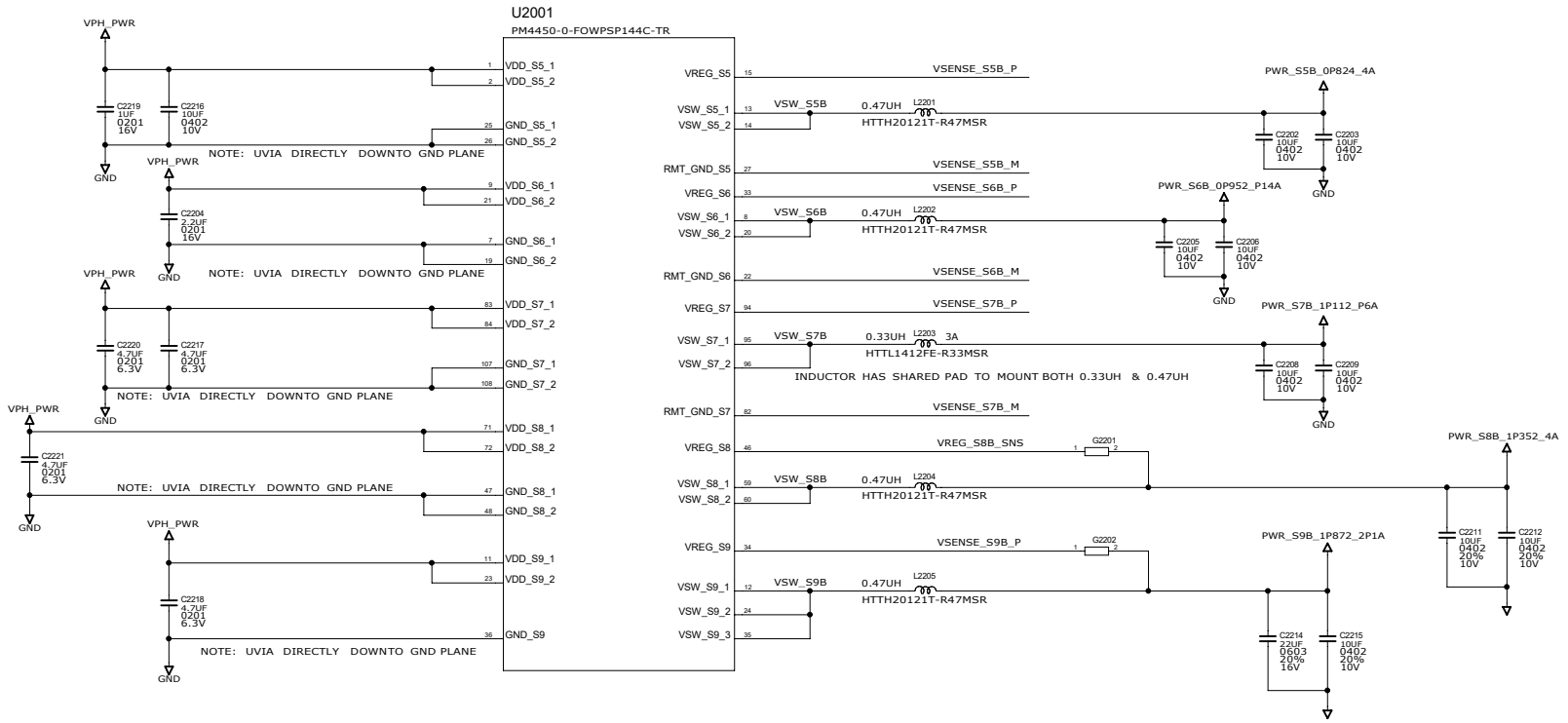

ZEBRA CONFIDENTIAL

ZEBRA TECHNOLOGIES CORP.
HOLTSVILLE, NEW YORK 11742

$STI_TITLE_1
PM4450:S5-9/S5B-S9B

SIZE	DWG. NO.	REV
D	$STI_DRAWING_NO	$STI_REV

$CON_LAST_MODIFIED $CON_SHEET OF $CON_TOTAL_PAGES

PM4450:LDOS/L1B-L28B

REVISIONS							
REV	ZONE	ECN	DESCRIPTION	E.C.	BY	APVD.	DATE
			SEE SHEET 1				

L4B, L9B PLEASE MAKE SURE THAT THE LDO NOT USE AND SW ALSO NOT TO OPEN IT, THEN YOU CAN REMOVE THE COUT

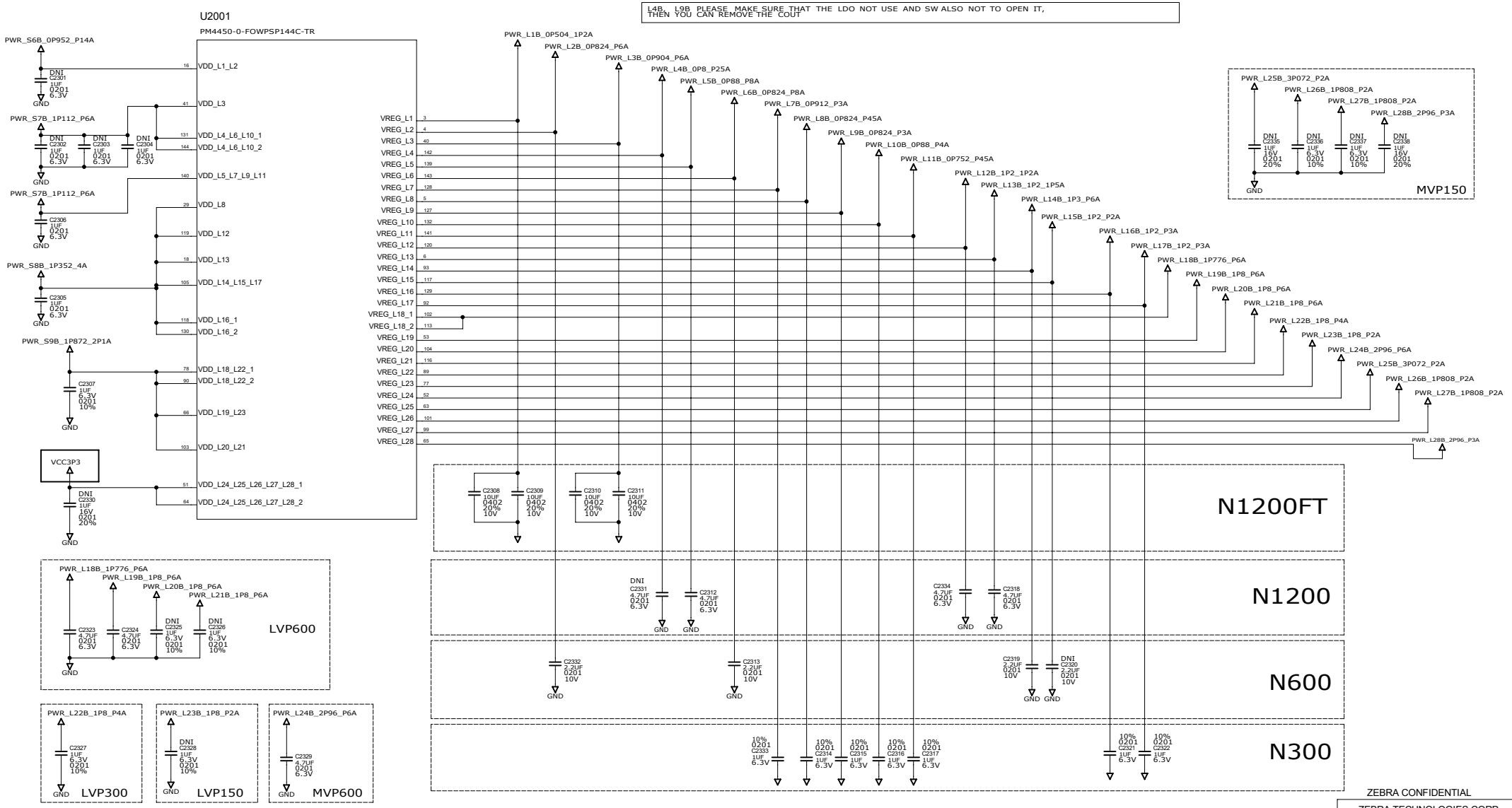

ZEBRA CONFIDENTIAL

ZEBRA TECHNOLOGIES CORP.
HOLTSVILLE, NEW YORK 11742

$STI_TITLE_1
PM4450:LDOS/L1B-L28B

SIZE	DWG. NO.	REV
D	$STI_DRAWING_NO	$STI_REV

$CON_LAST_MODIFIED $CONTENT_TOTAL_PAGES

PM4450C CORE PMIC

REV	ZONE		DESCRIPTION	E.C.	BY	APVD.	DATE
			SEE SHEET 1				

Regulator	Circuit type	I_{rated} (mA)	Specified/ programmable range (V)	Expected use
L1	Linear NMOS LDO	1200	0.528 to 1.504	SDR VDDCX
L2	Linear NMOS LDO	1200	0.528 to 1.504	Unused
L3	Linear PMOS LDO	300	1.808 to 3.312	VDD
L4	Linear PMOS LDO	300	1.808 to 3.312	Touch_AVDD
L5	Linear PMOS LDO	600	1.2, 1.504 to 3.544 [a]	FS VCC/eMMC VCC
L6	Linear PMOS LDO	300	1.808 to 3.312	VLED
L7	Linear PMOS LDO	600	1.2, 1.504 to 3.544 [b]	WCN 3P3

[a] To configure L5 to 1.2 V, set register 0x4454 bit 1 to 1
[b] To configure L7 to 1.2 V, set register 0x4654 bit 1 to 1

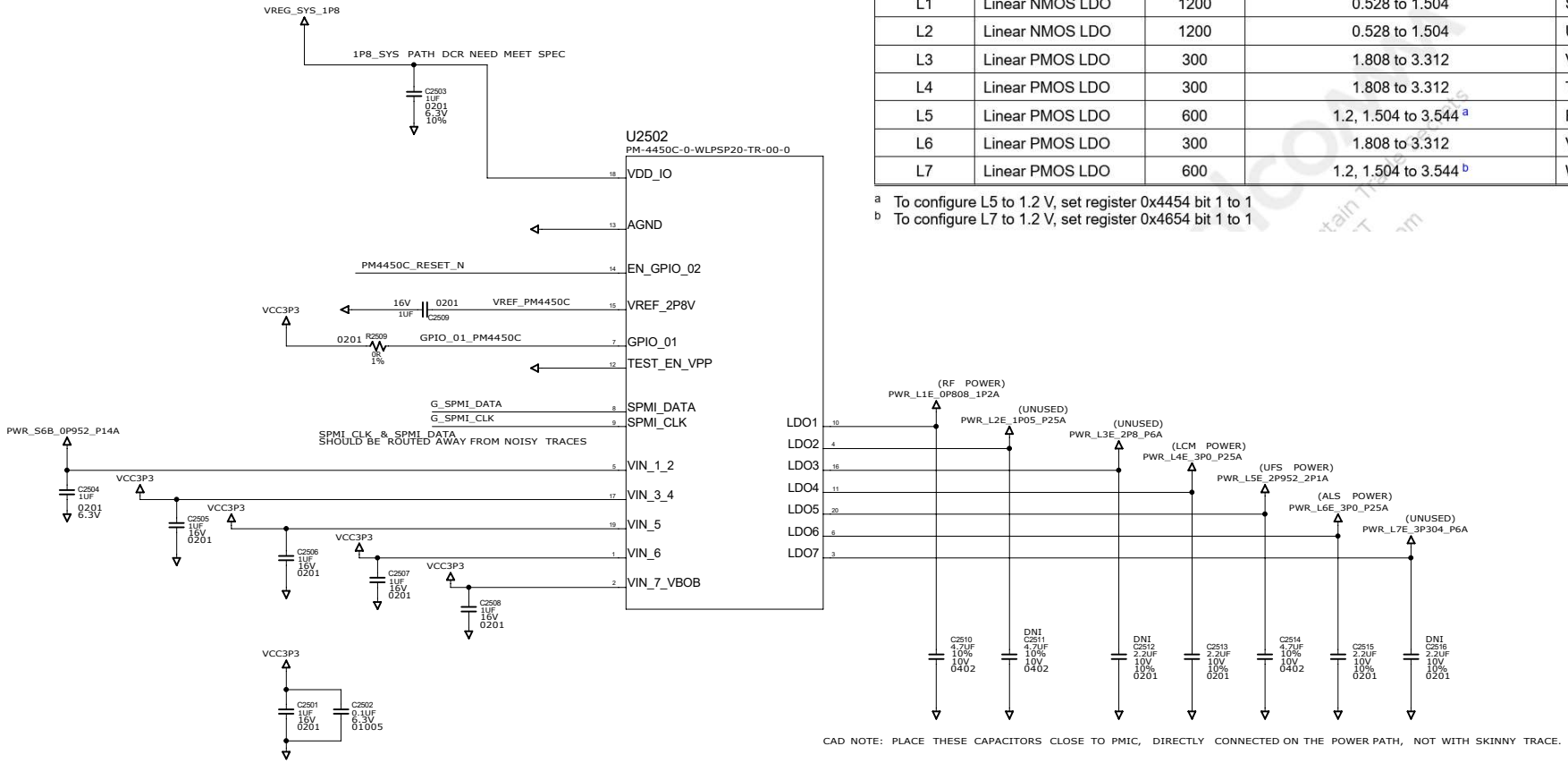

CAD NOTE: PLACE THESE CAPACITORS CLOSE TO PMIC, DIRECTLY CONNECTED ON THE POWER PATH, NOT WITH SKINNY TRACE.

NOTE : FOR LAYOUT GUIDELINES , SEE PM4450C POWER MANAGEMENTIC DESIGN GUIDELINES/TRAINING SLIDES : 80-48924-5

ZEBRA CONFIDENTIAL

ZEBRA TECHNOLOGIES CORP.
HOLTSVILLE, NEW YORK 11742

$STI_TITLE_1
PM4450C CORE PMIC

SIZE D | DWG. NO. $STI_DRAWING_NO | REV $STI_REV

$CON_LAST_MODIFIED | $CONTINUED_FROM_PAGE | $CONTINUED_TO_PAGE

PM7250B-2:CHARGER

REV	ZONE		DESCRIPTION	E.C.	BY	APVD.	DATE
			SEE SHEET 1				

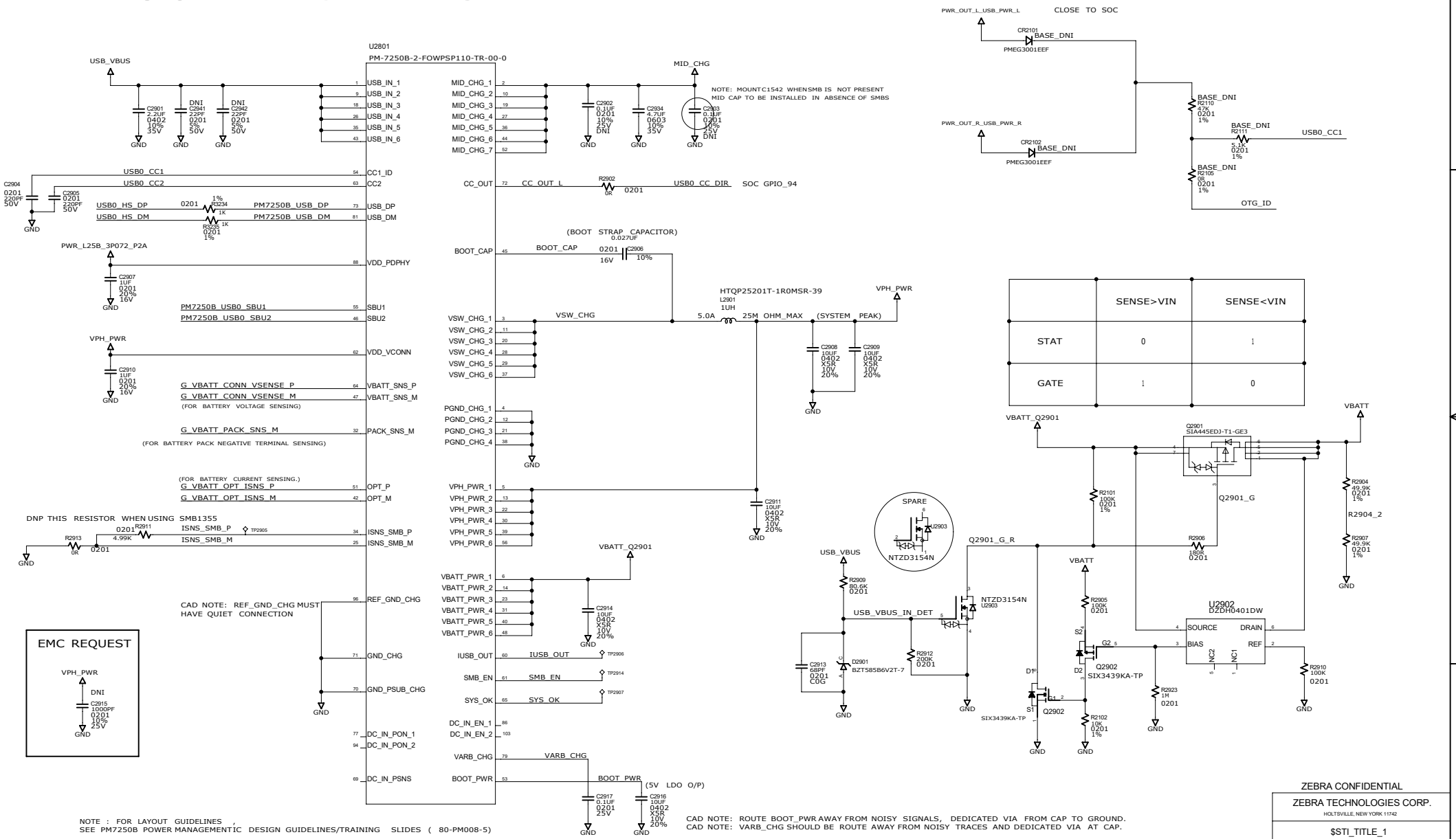

	SENSE>VIN	SENSE<VIN
STAT	0	1
GATE	1	0

NOTE : FOR LAYOUT GUIDELINES ,
SEE PM7250B POWER MANAGEMENTIC DESIGN GUIDELINES/TRAINING SLIDES (80-PM008-5)

CAD NOTE: ROUTE BOOT_PWR AWAY FROM NOISY SIGNALS, DEDICATED VIA FROM CAP TO GROUND.
CAD NOTE: VARB_CHG SHOULD BE ROUTE AWAY FROM NOISY TRACES AND DEDICATED VIA AT CAP.

ZEBRA CONFIDENTIAL

ZEBRA TECHNOLOGIES CORP.
HOLTSVILLE, NEW YORK 11742

$STI_TITLE_1
PM7250B-2:CHARGER

SIZE	DWG. NO.	REV
D	$STI_DRAWING_NO	$STI_REV

$CON_LAST_MODIFIED $CONTENT_LAST_MODIFIED PAGE $PAGE OF $TOTALPAGES

PM7250B-2:HK/GPIOS/HAPTICS

REVISIONS							
REV	ZONE	ECN	DESCRIPTION	E.C.	BY	APVD.	DATE
			SEE SHEET 1				

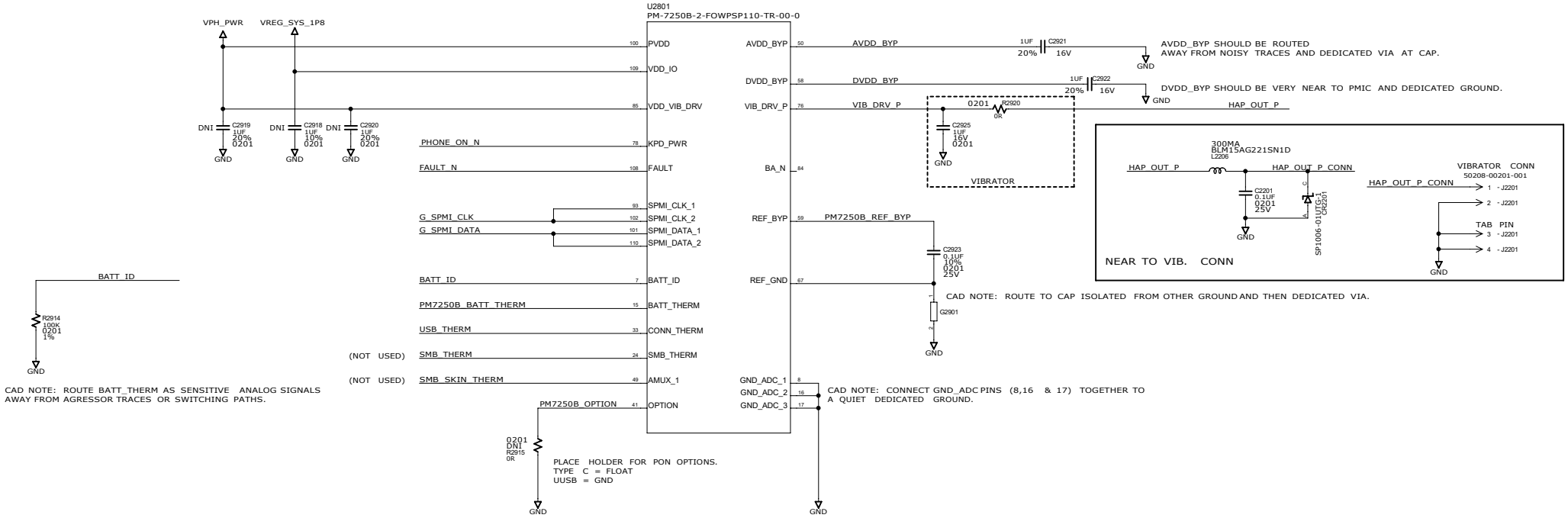

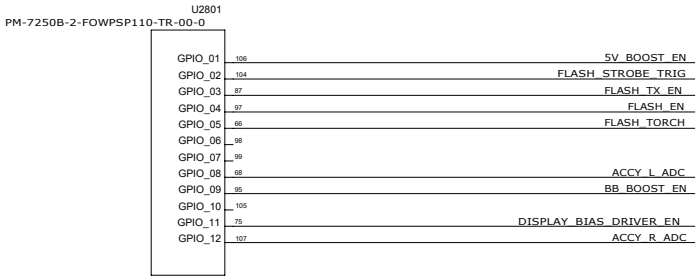

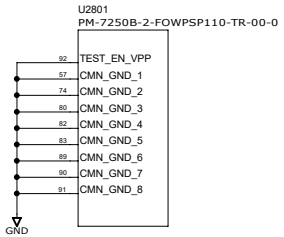

ZEBRA CONFIDENTIAL

ZEBRA TECHNOLOGIES CORP.
HOLTSVILLE, NEW YORK 11742

$STI_TITLE_1
PM7250B-2:HK/GPIOS/HAPTICS

SIZE	DWG. NO.	REV
D	$STI_DRAWING_NO	$STI_REV

$CON_LAST_MODIFIED $CON_SHEET_NO OF $CON_TOTAL_PAGES

PM8010 CAMERA POWER

REV	ZONE		DESCRIPTION	E.C.	BY	APVD.	DATE
			SEE SHEET 1				

Regulator	Circuit type	I_{rated} (mA)	Specified/ programmable range (V)	Expected use
L1	Linear NMOS LDO	1500	0.528 to 1.504	Sensor DVDD
L2	Linear NMOS LDO	1500	0.528 to 1.504	Sensor DVDD
L3	Linear PMOS LDO	300	1.808 to 3.312	All are fully programmable and can be used for AVDD, AF, IO, and OIS
L4	Linear PMOS LDO	300	1.808 to 3.312	All are fully programmable and can be used for AVDD, AF, IO, and OIS
L5	Linear PMOS LDO	600	1.2, 1.504 to 3.544 [1]	All are fully programmable and can be used for AVDD, AF, IO, and OIS
L6	Linear PMOS LDO	300	1.808 to 3.312	All are fully programmable and can be used for AVDD, AF, IO, and OIS
L7	Linear PMOS LDO	600	1.2, 1.504 to 3.544 [2]	All are fully programmable and can be used for AVDD, AF, IO, and OIS

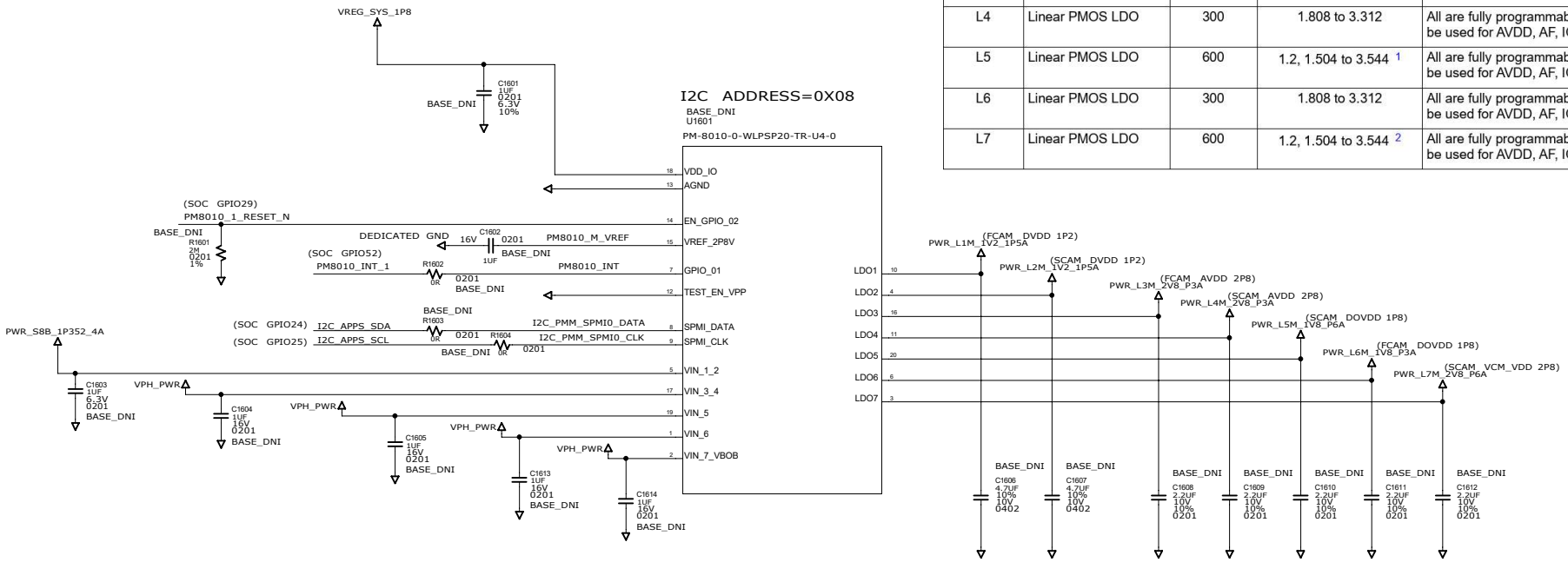

LOCAL CAPACITORS

CAD NOTE: PLACE THESE CAPACITORS CLOSE TO PM8010, DIRECTLY CONNECTED ON THE POWER PATH, NOT WITH SKINNY TRACE.
NOTE : FOR LAYOUT GUIDELINES , SEE PM8010 POWER MANAGEMENTIC DESIGN GUIDELINES/TRAINING SLIDES :80-18582-5

ZEBRA CONFIDENTIAL

ZEBRA TECHNOLOGIES CORP.
HOLTSVILLE, NEW YORK 11742

$STI_TITLE_1
PM8010 CAMERA POWER

SIZE D | DWG. NO. $STI_DRAWING_NO | REV $STI_REV

$CON_LAST_MODIFIED | $CONTENT_TOTAL_PAGES

MEMORY:UFS

REVISIONS							
REV	ZONE	ECN	DESCRIPTION	E.C.	BY	APVD.	DATE
			SEE SHEET 1				

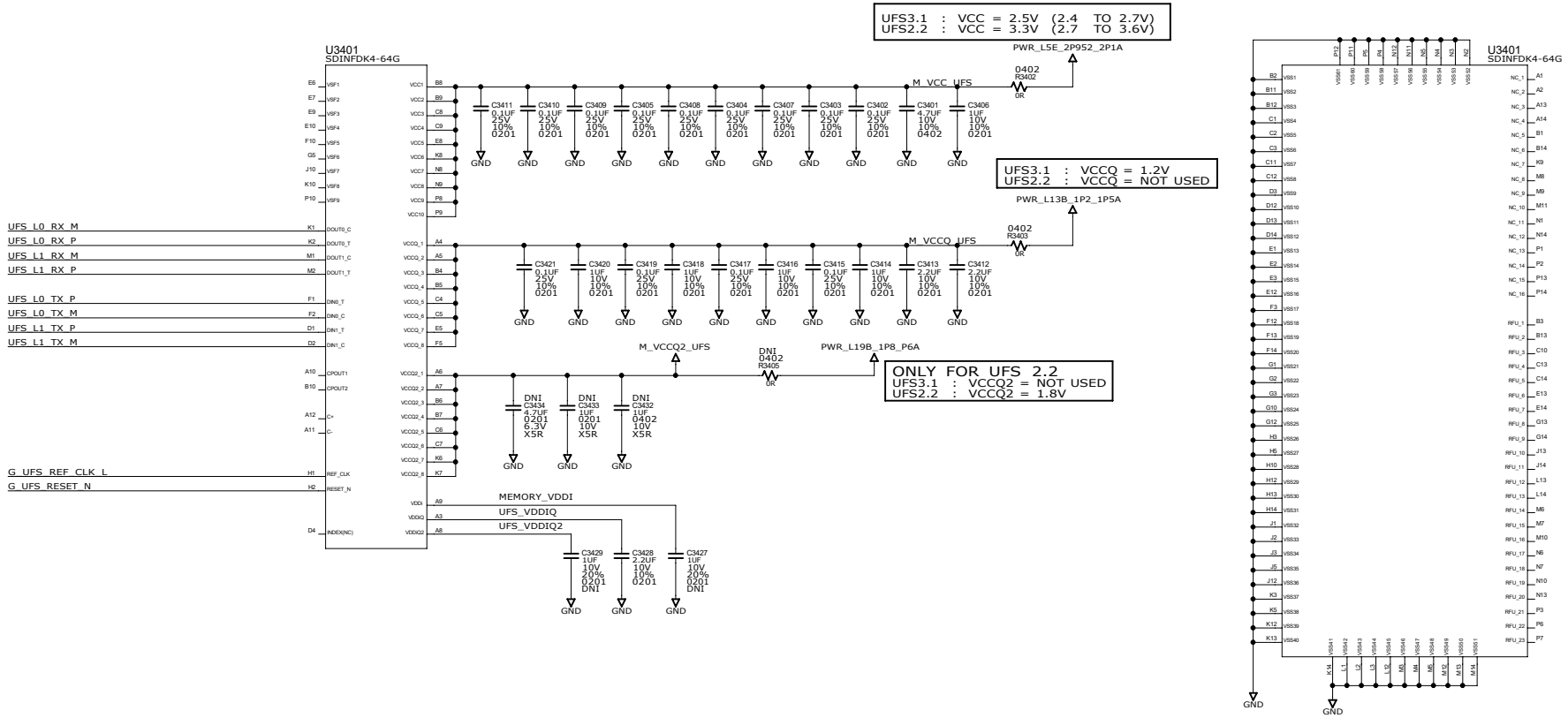

ZEBRA CONFIDENTIAL

ZEBRA TECHNOLOGIES CORP.
HOLTSVILLE, NEW YORK 11742

$STI_TITLE_1
MEMORY:UFS

SIZE	DWG. NO.	REV
D	$STI_DRAWING_NO	$STI_REV

$CON_LAST_MODIFIED $CONTENT_LAST_MODIFIED PAGE $PAGE OF $TOTAL_PAGES

MEMORY:LPDDR5

REVISIONS							
REV	ZONE	ECN	DESCRIPTION	E.C.	BY	APVD.	DATE
			SEE SHEET 1				

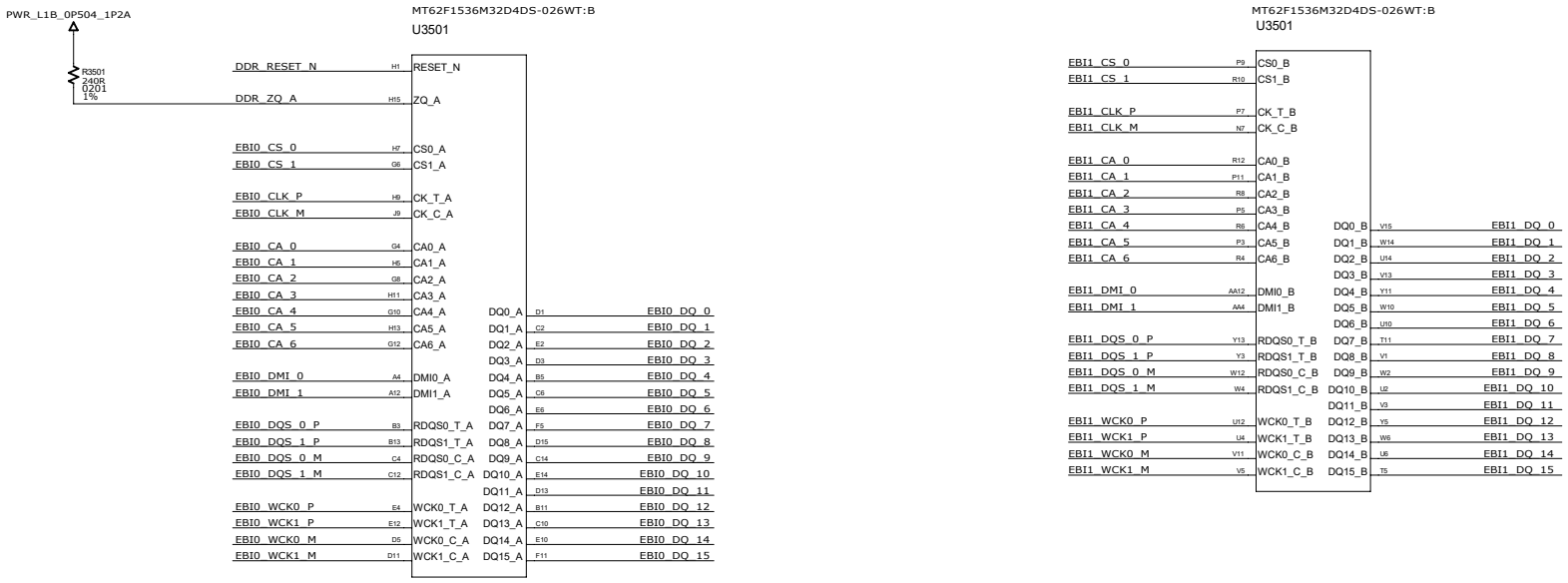

ZEBRA CONFIDENTIAL

ZEBRA TECHNOLOGIES CORP.
HOLTSVILLE, NEW YORK 11742

$STI_TITLE_1
MEMORY:LPDDR5

SIZE	DWG. NO.	REV
D	$STI_DRAWING_NO	$STI_REV

$CON_LAST_MODIFIED $CON_CURRENT_DATE PAGE $CON_CURRENT_PAGE OF $CON_TOTAL_PAGES

MEMORY:LPDDR5 POWER/GND

REV	ZONE	ECN	DESCRIPTION	E.C.	BY	APVD.	DATE
			SEE SHEET 1				

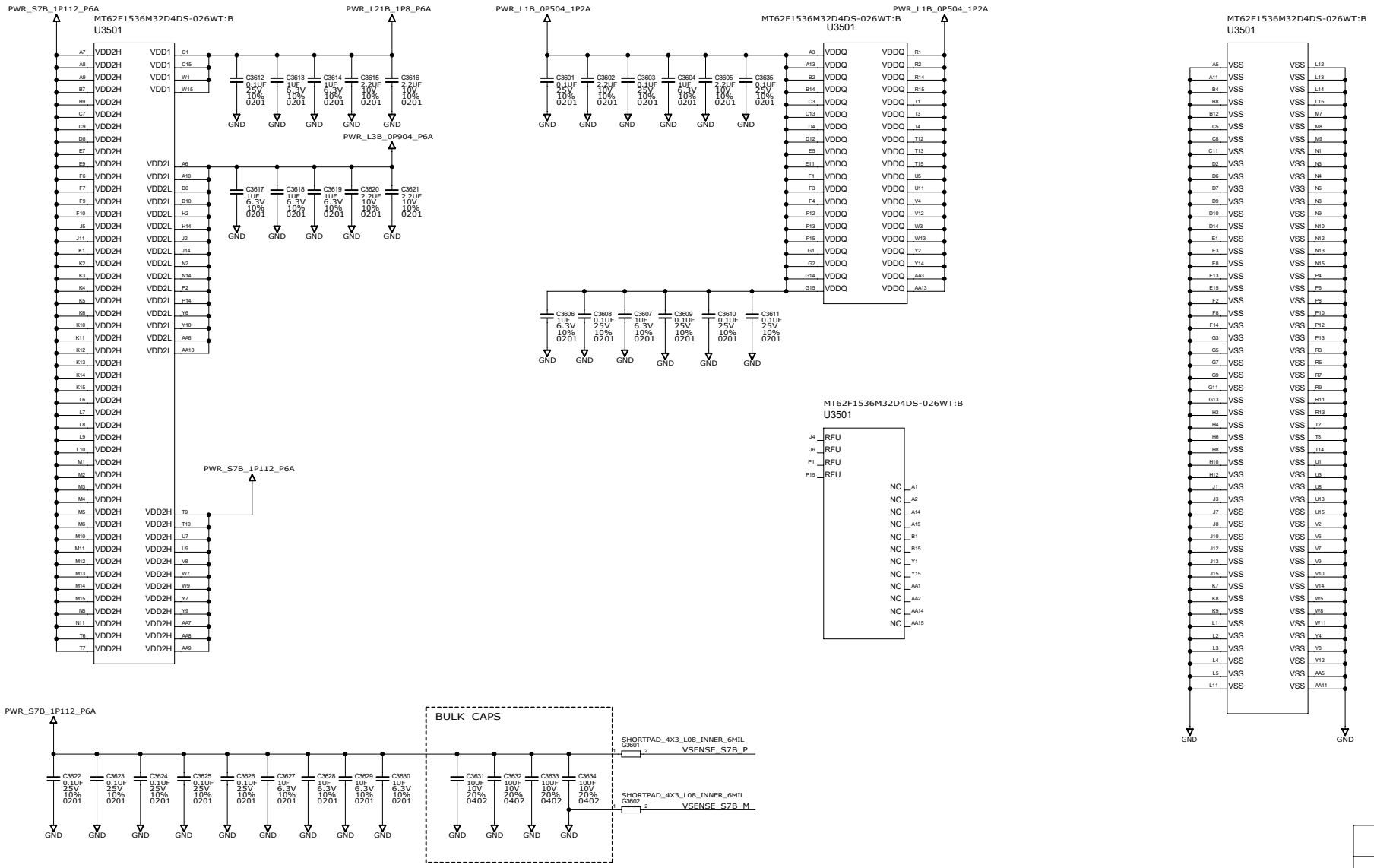

ZEBRA CONFIDENTIAL

ZEBRA TECHNOLOGIES CORP.
HOLTSVILLE, NEW YORK 11742

$STI_TITLE_1
MEMORY:LPDDR5 POWER/GND

SIZE	DWG. NO.	REV
D	$STI_DRAWING_NO	$STI_REV

$CON_LAST_MODIFIED $CON_TOTAL_PAGES

INDICATOR LEDS:RGB DRIVER

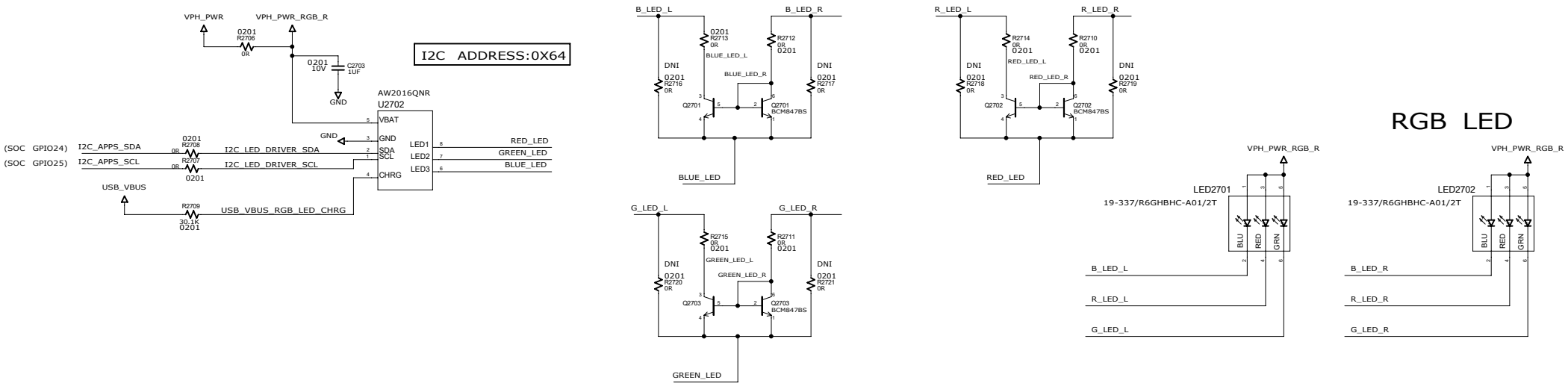

FLASH LED DRIVER

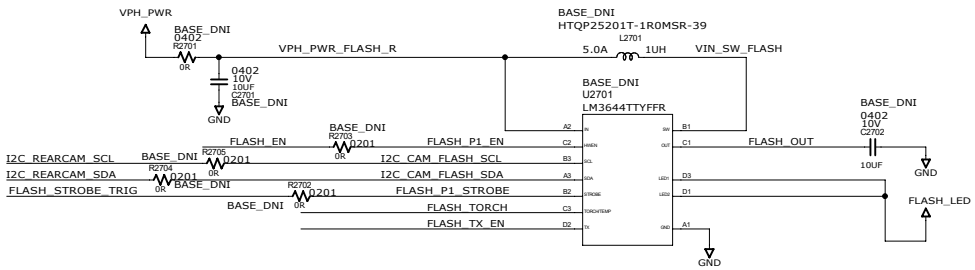

FLASH CONNECTOR

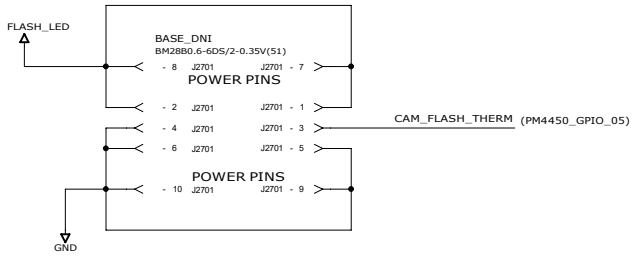

REVISIONS							
REV	ZONE	ECN	DESCRIPTION	E.C.	BY	APVD.	DATE
			SEE SHEET 1				

ZEBRA CONFIDENTIAL

ZEBRA TECHNOLOGIES CORP.
HOLTSVILLE, NEW YORK 11742

$STI_TITLE_1
INDICAOTR LEDS,FLSH LED

SIZE	DWG. NO.	REV
D	$STI_DRAWING_NO	$STI_REV

$CON_LAST_MODIFIED $CURRENT_DATE $TOTAL_PAGES

REVISIONS							
REV	ZONE	ECN	DESCRIPTION	E.C.	BY	APVD.	DATE
			SEE SHEET 1				

USB OTG PWR SWITCH

MOVE PWR SWITCH NEAR THE RUGGED CONNECTORS

HW WORKAROUND TO PREVENT DC_IN_BOOT_UP ISSUE ON PM7250B

PWR KEY TRIGGER FOR DC IN BOOT

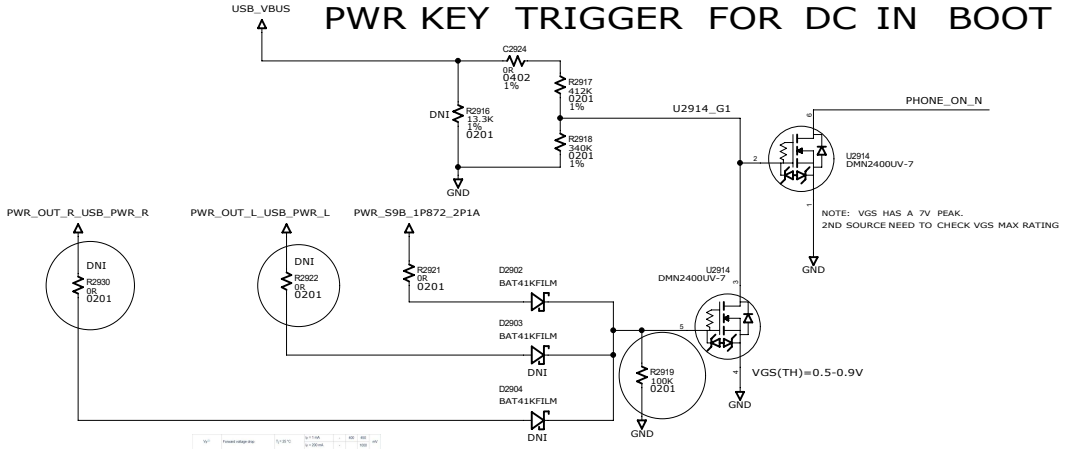

NOTE: IF VREG_BOB NOT AVAILABLE, USE POWER RAIL THAT IS 1ST IN THE PMIC POWER ON SEQUENCE.

USB SS, CCX, SUBX (BASE ONLY)

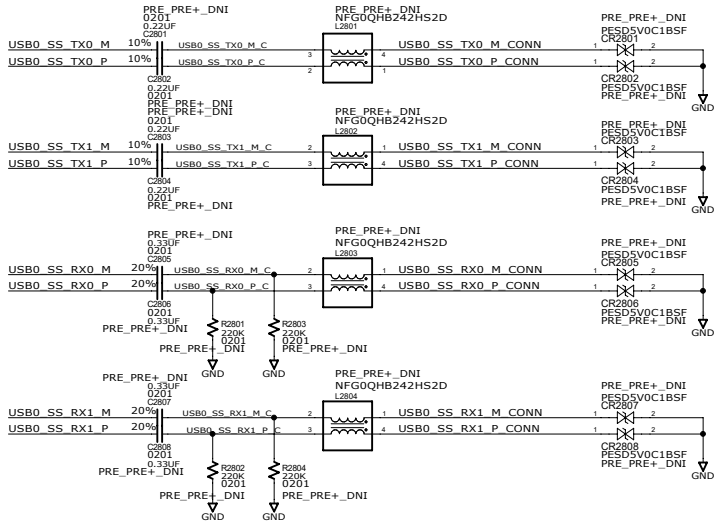

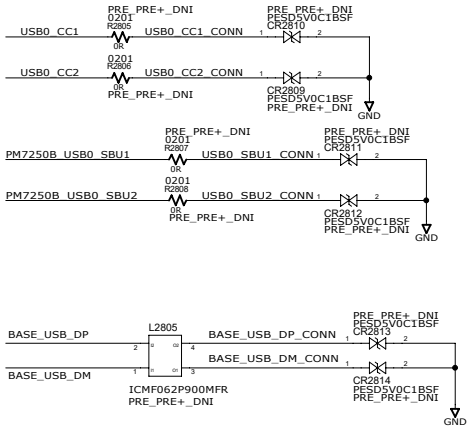

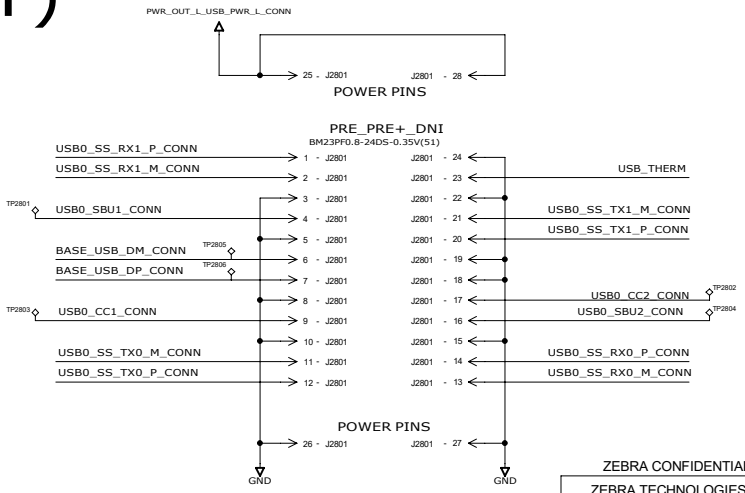

ZEBRA CONFIDENTIAL

ZEBRA TECHNOLOGIES CORP.
HOLTSVILLE, NEW YORK 11742

$STI_TITLE_1
USB OTG PWR,SS,CC,SUB/DC BOOT UP

SIZE	DWG. NO.	REV
D	$STI_DRAWING_NO	$STI_REV

$CON_LAST_MODIFIED $CONTENTS_LAST_MODIFIED $TOTAL_PAGES

DISPLAY AND CTP CONNECTOR

REVISIONS							
REV	ZONE	ECN	DESCRIPTION	E.C.	BY	APVD.	DATE
			SEE SHEET 1				

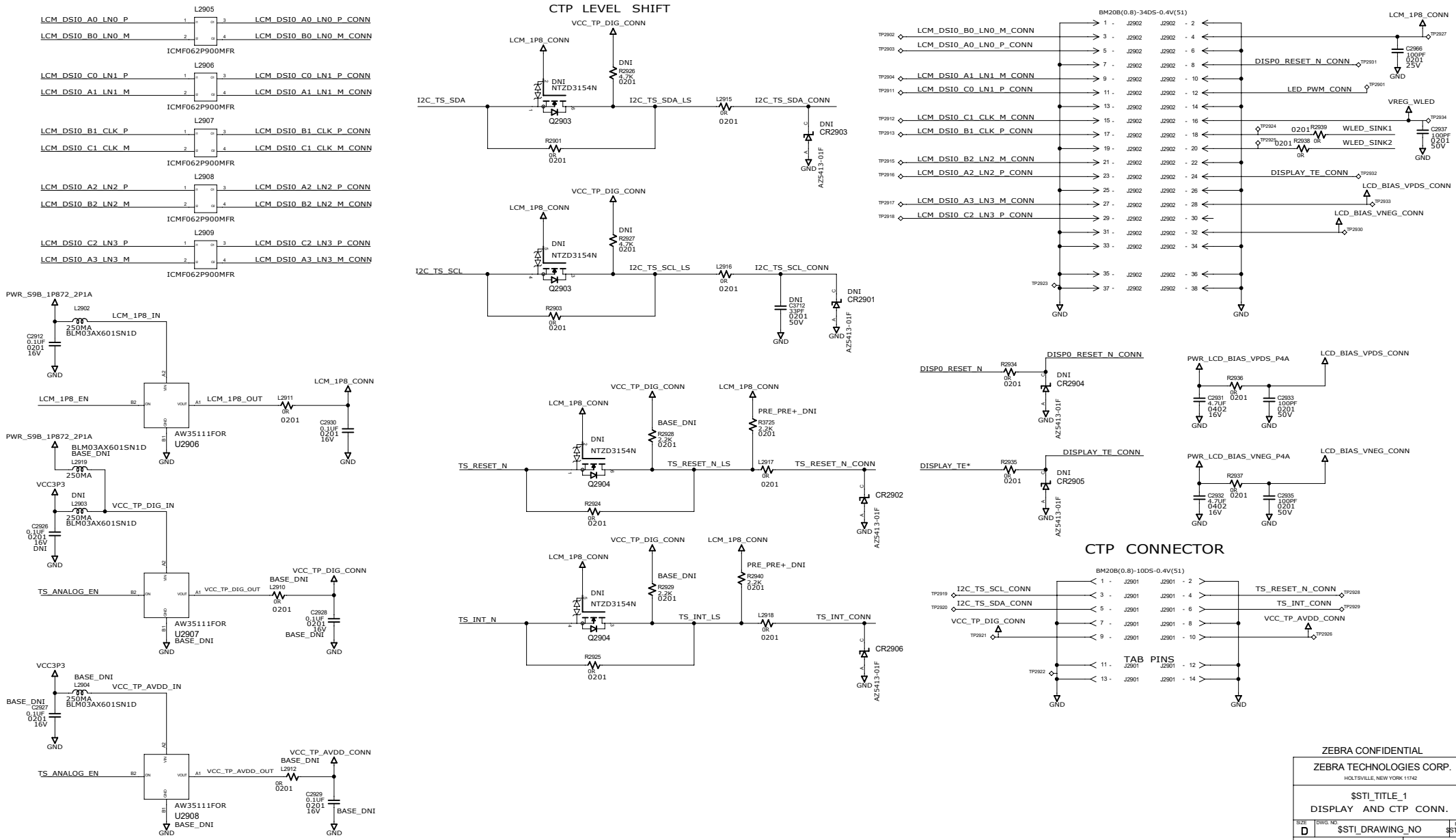

ZEBRA CONFIDENTIAL

ZEBRA TECHNOLOGIES CORP.
HOLTSVILLE, NEW YORK 11742

$STI_TITLE_1
DISPLAY AND CTP CONN.

SIZE	DWG. NO.	REV
D	$STI_DRAWING_NO	$STI_REV

$CON_LAST_MODIFIED $CONTENT_TOTAL_PAGES

DISPLAY DRIVER AND BIAS DRIVER

REVISIONS							
REV	ZONE	ECN	DESCRIPTION	E.C.	BY	APVD.	DATE
			SEE SHEET 1				

BACKLIGHT DRIVER

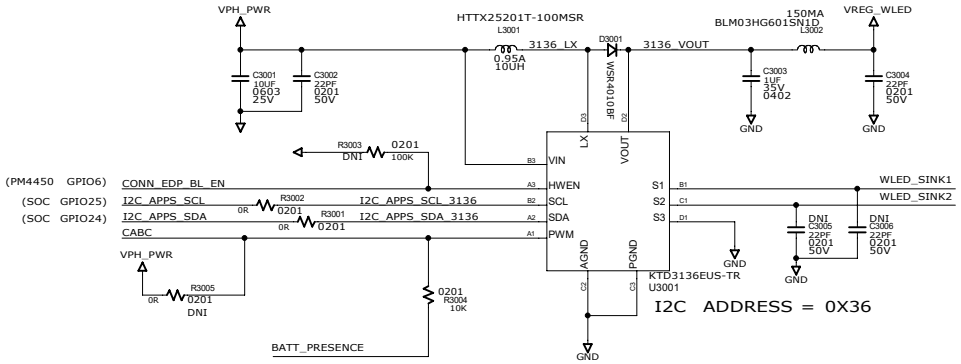

BIAS DRIVER

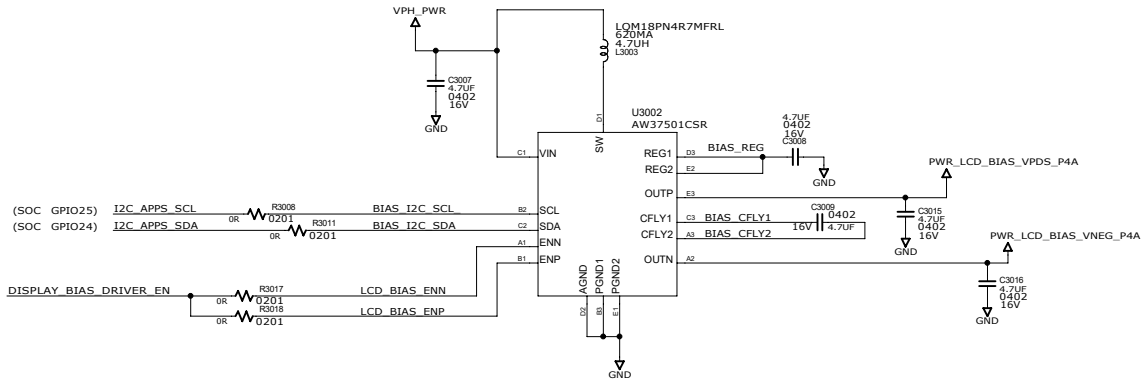

ZEBRA CONFIDENTIAL

ZEBRA TECHNOLOGIES CORP.
HOLTSVILLE, NEW YORK 11742

$STI_TITLE_1
DSLY DRIVER & BIAS DRIVER

SIZE	DWG. NO.	REV
D	$STI_DRAWING_NO	$STI_REV

$CON_LAST_MODIFIED $CURRENT_DATE PAGE $CURRENT_PAGE OF $TOTAL_PAGES

REVISIONS							
REV	ZONE	ECN	DESCRIPTION	E.C.	BY	APVD.	DATE
			SEE SHEET 1				

KEYPAD CONNECTOR(PRE+_ONLY)

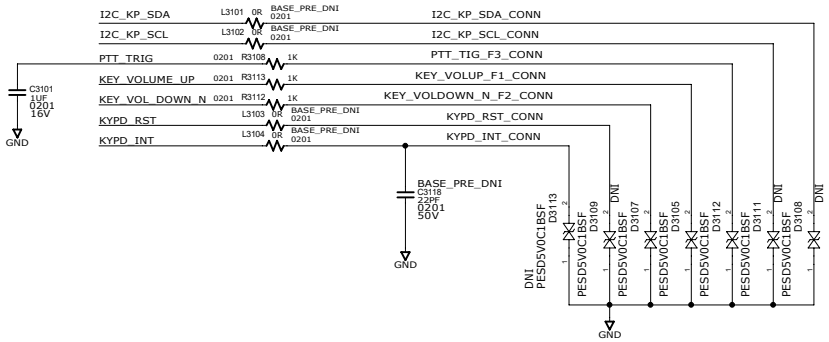

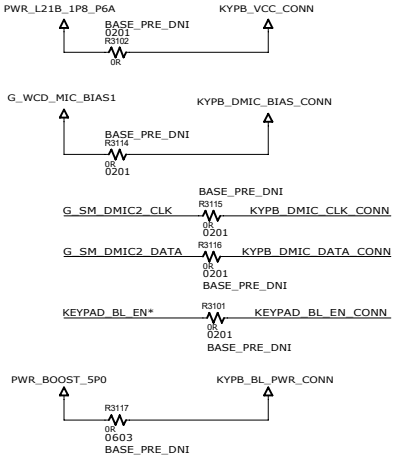

KEYPAD CONNECTOR

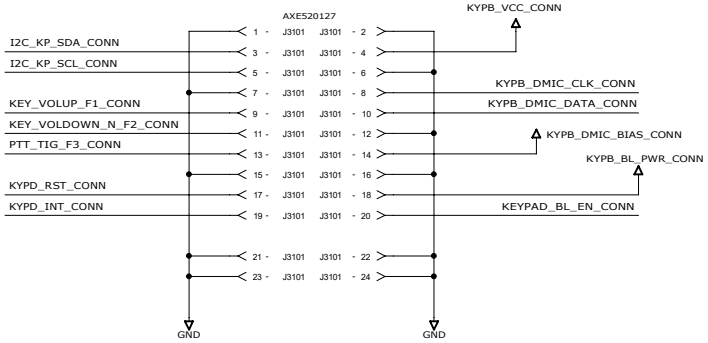

3-KEY HW RESET

UP/DOWN+POWER KEY RESET

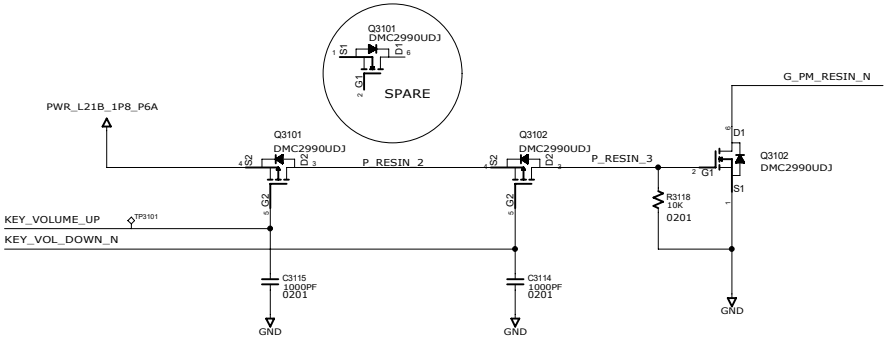

ZEBRA CONFIDENTIAL

ZEBRA TECHNOLOGIES CORP.
HOLTSVILLE, NEW YORK 11742

$STI_TITLE_1
KEYPAD CONN./3-KEY RESET

SIZE	DWG. NO.	REV
D	$STI_DRAWING_NO	$STI_REV

$CON_LAST_MODIFIED $CURRENT_DATE SHEET $CURRENT_SHEET OF $TOTAL_PAGES

SUPERCAP CHARGING/DSICHARGING

REVISIONS							
REV	ZONE	ECN	DESCRIPTION	E.C.	BY	APVD.	DATE
			SEE SHEET 1				

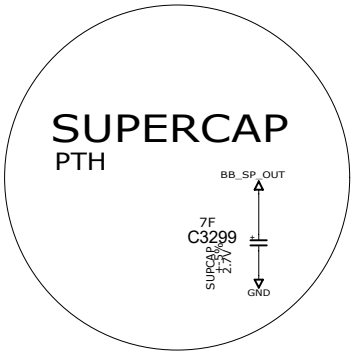

BB DISCHARGING

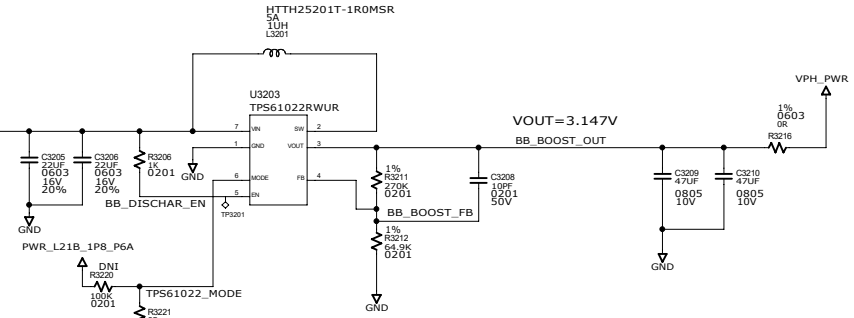

R1 = (VOUT/VREF-1))*R2

	MIN	TYP	MAX
FB(VREF)	0.585	0.600	0.615
R1	267.30	270	272.7
R2	64.251	64.9	65.549
VOUT	3.018	3.096	3.173

BB CHARGING

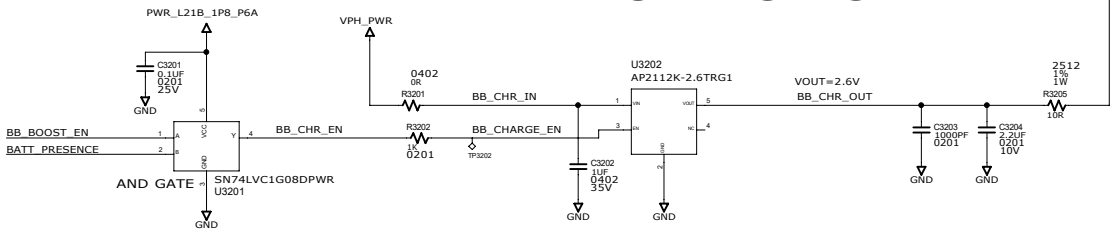

BB DET

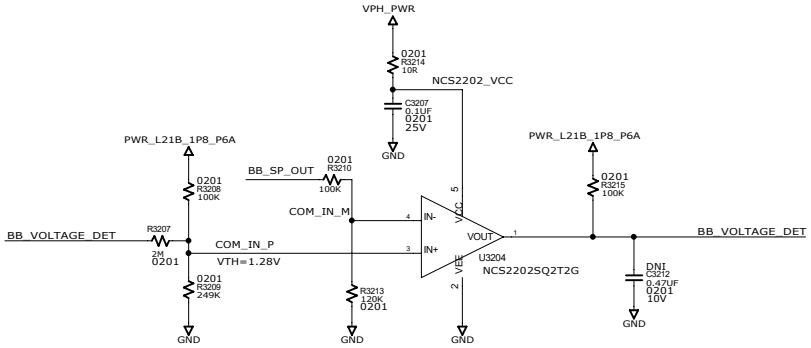

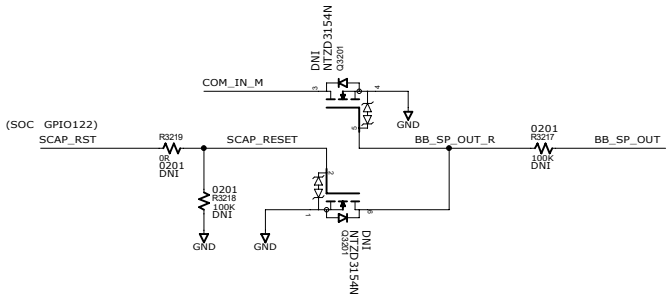

ZEBRA CONFIDENTIAL

ZEBRA TECHNOLOGIES CORP.
HOLTSVILLE, NEW YORK 11742

$STI_TITLE_1
SUPERCAP CHARGE/DISCHARGE

SIZE	DWG. NO.	REV
D	$STI_DRAWING_NO	$STI_REV

$CON_LAST_MODIFIED $CURRENT_DATE $TOTAL_PAGES

BATTERY MONITORING/PWR BUTTON BLOCK

REVISIONS						
REV	ZONE		DESCRIPTION	E.C.	BY	APVD	DATE
			SEE SHEET 1				

PWR_GOOD DETECT LEVEL =3.0V

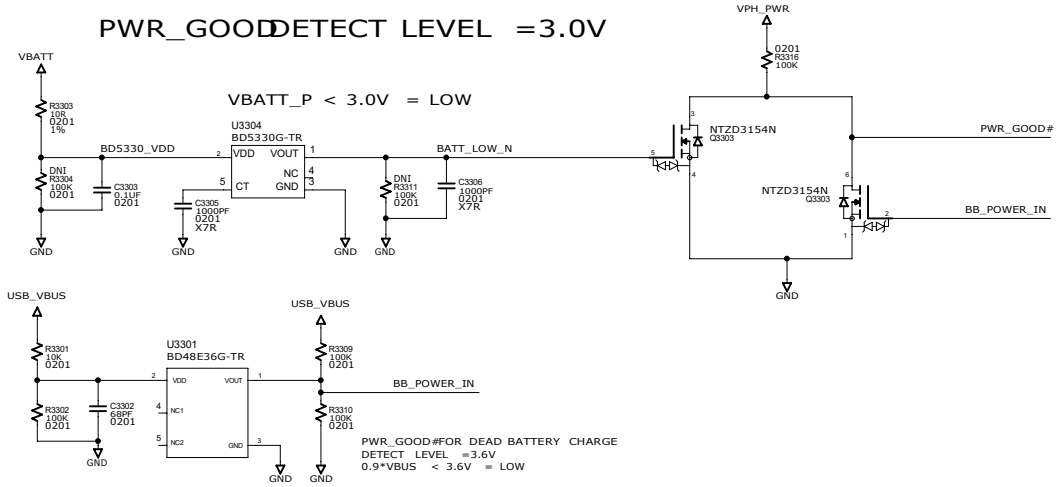

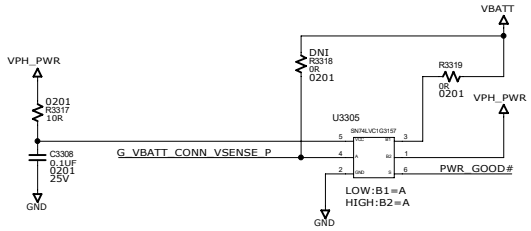

BATTERY VOLTAGE DETECTION

BATT PRESENSE DETECT FOR 2.6V

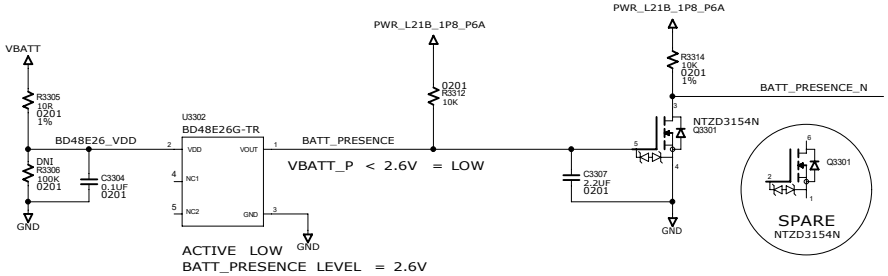

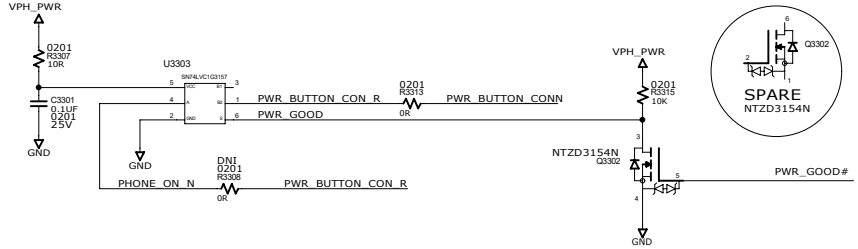

BATT_LOW_N	USB_IN_MID	PWR_GOOD#	BATT_CONN_SNS_P
1	0	0	VBATT_P
0	1	0	VBATT_P
1	0	0	VBATT_P
0	0	1	VPH_PWR

ZEBRA CONFIDENTIAL

ZEBRA TECHNOLOGIES CORP.
HOLTSVILLE, NEW YORK 11742

$STI_TITLE_1
BATTERY MONITORING & PWR BUTTON BLOCK

SIZE	DWG. NO.	REV
D	$STI_DRAWING_NO	$STI_REV

$CON_LAST_MODIFIED $CON_SHEET_NO OF $CON_TOTAL_PAGES

REV	ZONE		REVISIONS DESCRIPTION	E.C.	BY	APVD.	DATE
			SEE SHEET 1				

BATTERY CONNECTOR

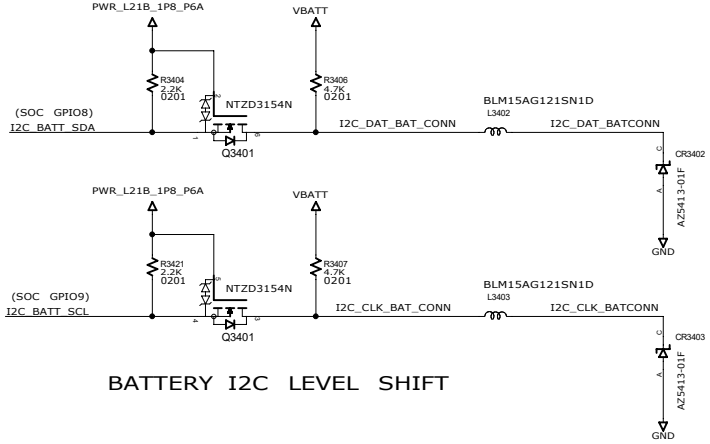

BATTERY I2C LEVEL SHIFT

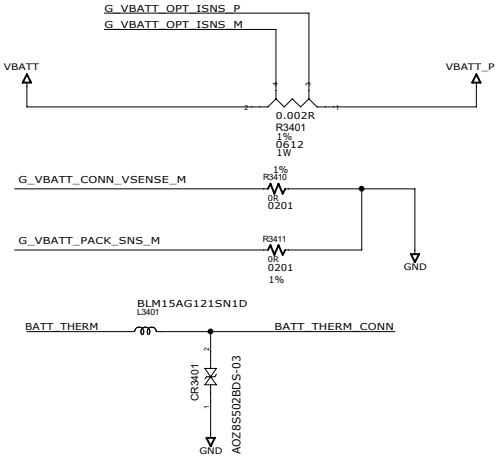

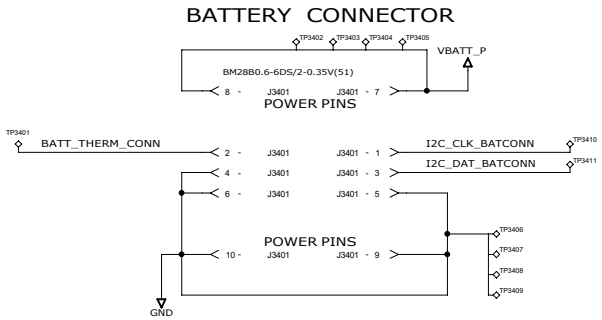

BATTERY THERM DETECTION

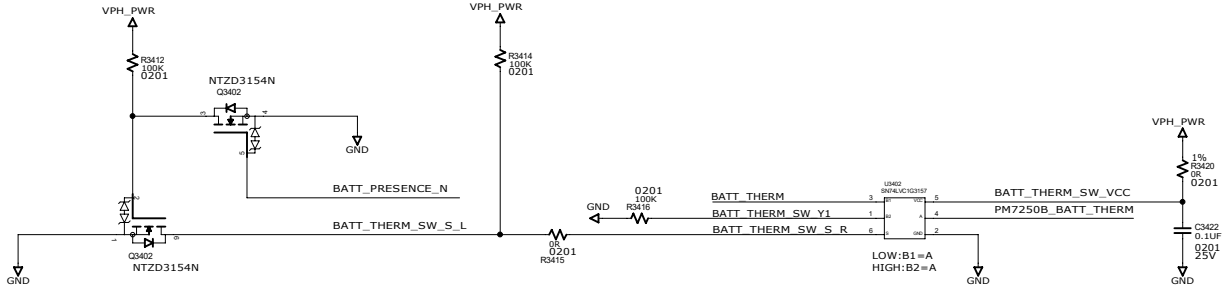

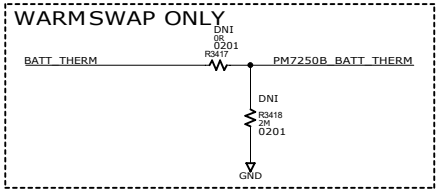

VBATT	BATT_PRESNECE_N	Z	SYSTEM STATUS
PRESENT>2.6V	LOW(0)	Y0	BATTERY NTC
ABSENT<2.6V	HIGH(1)	Y1	RESISTANCE 100KOHM

ZEBRA CONFIDENTIAL

ZEBRA TECHNOLOGIES CORP.
HOLTSVILLE, NEW YORK 11742

$STI_TITLE_1
BATTERY CONN.&THERM DETEC

SIZE	DWG. NO.	REV
D	$STI_DRAWING_NO	$STI_REV

$CON_LAST_MODIFIED $CON_SHEET OF $CON_TOTAL_PAGES

POWER MUX/DC POWER INPUT

REVISIONS							
REV	ZONE	ECN	DESCRIPTION	E.C.	BY	APVD.	DATE
			SEE SHEET 1				

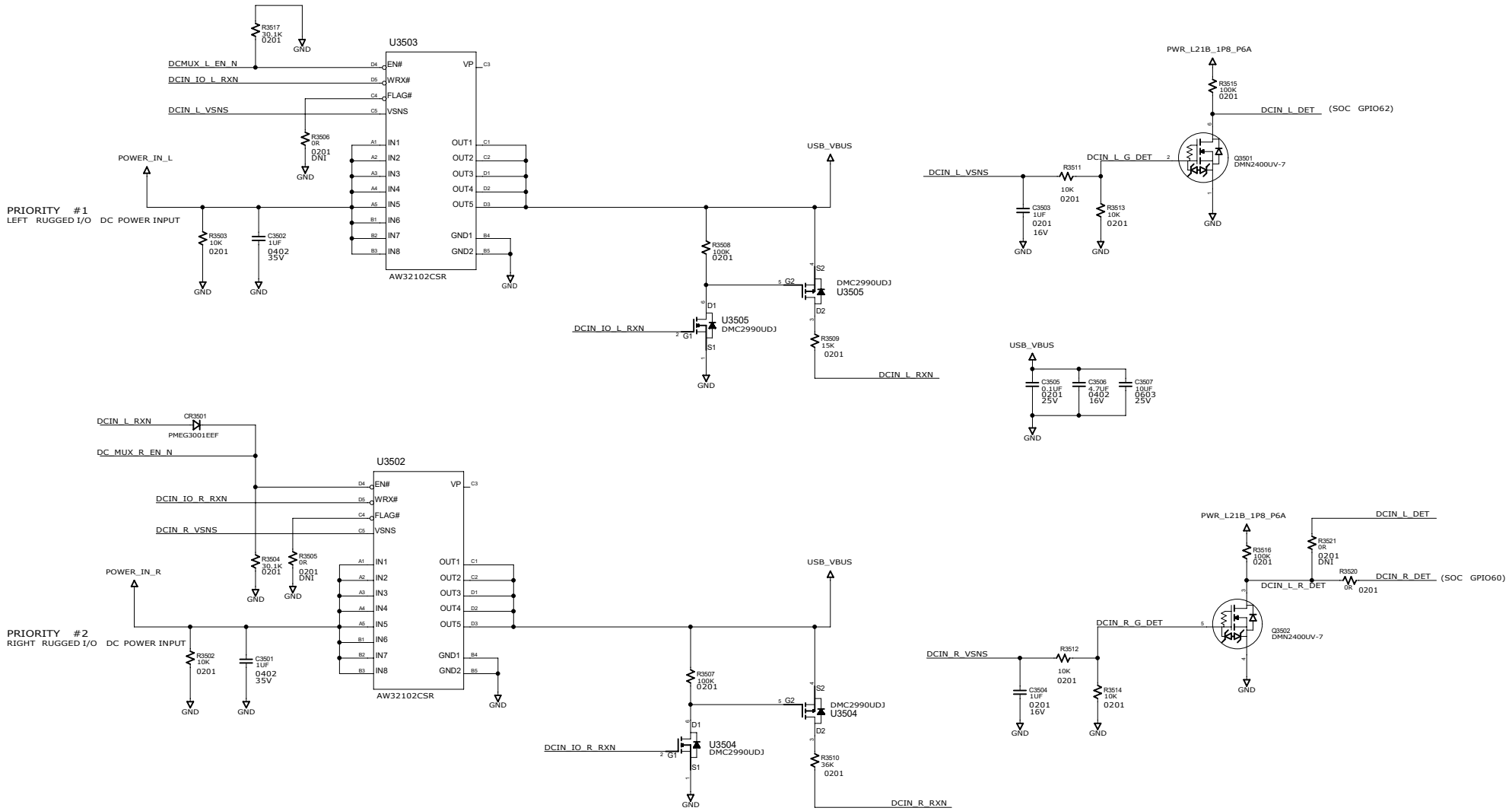

ZEBRA CONFIDENTIAL

ZEBRA TECHNOLOGIES CORP.
HOLTSVILLE, NEW YORK 11742

$STI_TITLE_1
POWER MUX/DC POWER INPUT

SIZE	DWG. NO.	REV
D	$STI_DRAWING_NO	$STI_REV

$CON_LAST_MODIFIED $CONTENT_TOTAL_PAGES

POWER MUX/USB POWER INPUT

REVISIONS							
REV	ZONE	ECN	DESCRIPTION	E.C.	BY	APVD.	DATE
			SEE SHEET 1				

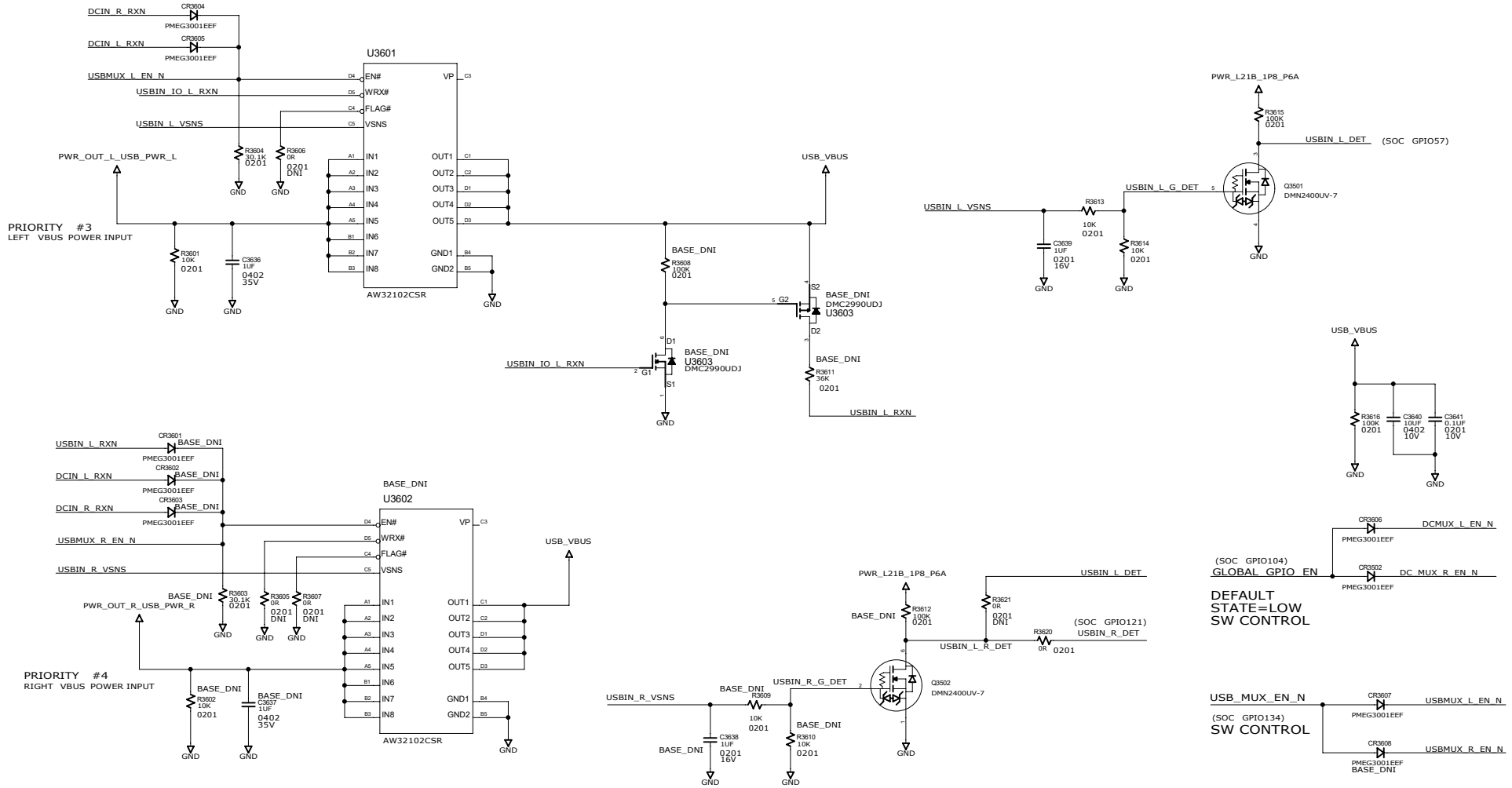

ZEBRA CONFIDENTIAL

ZEBRA TECHNOLOGIES CORP.
HOLTSVILLE, NEW YORK 11742

$STI_TITLE_1
POWER MUX/USB POWER INPUT

SIZE	DWG. NO.	REV
D	$STI_DRAWING_NO	$STI_REV

$CON_LAST_MODIFIED $CON_TOTAL_PAGES

REVISIONS							
REV	ZONE	ECN	DESCRIPTION	E.C.	BY	APVD.	DATE
			SEE SHEET 1				

BOOST POWER 5P2

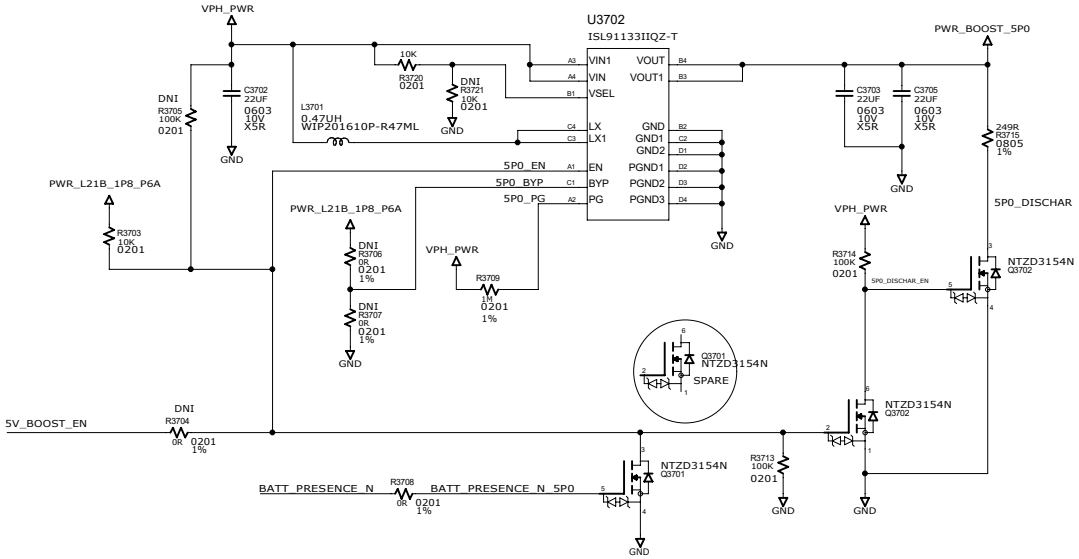

BUCK/BOOST POWER 3P3

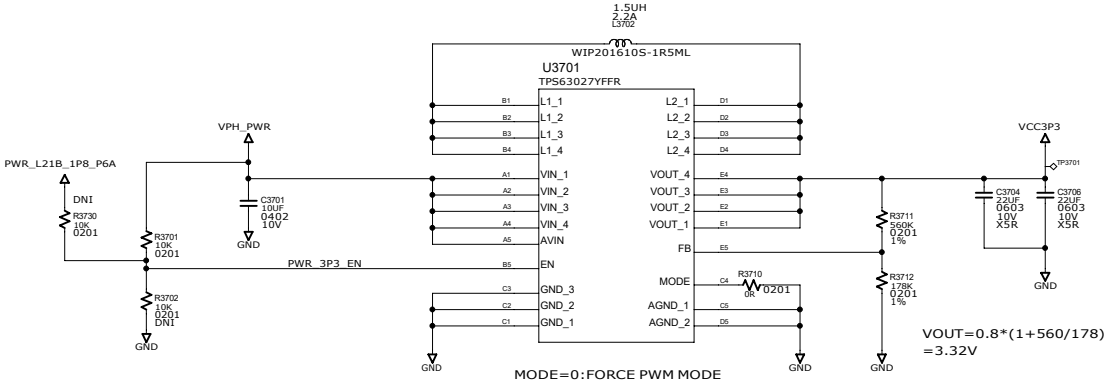

ZEBRA CONFIDENTIAL

ZEBRA TECHNOLOGIES CORP.
HOLTSVILLE, NEW YORK 11742

$STI_TITLE_1
BOOST 5P2 & BUCK/BOOST 3P3

SIZE	DWG. NO.	REV
D	$STI_DRAWING_NO	$STI_REV

$CON_LAST_MODIFIED $CONTENT_TOTAL_PAGES

AUDIO CODEC WCD9370

REVISIONS							
REV	ZONE	ECN	DESCRIPTION	E.C.	BY	APVD.	DATE
			SEE SHEET 1				

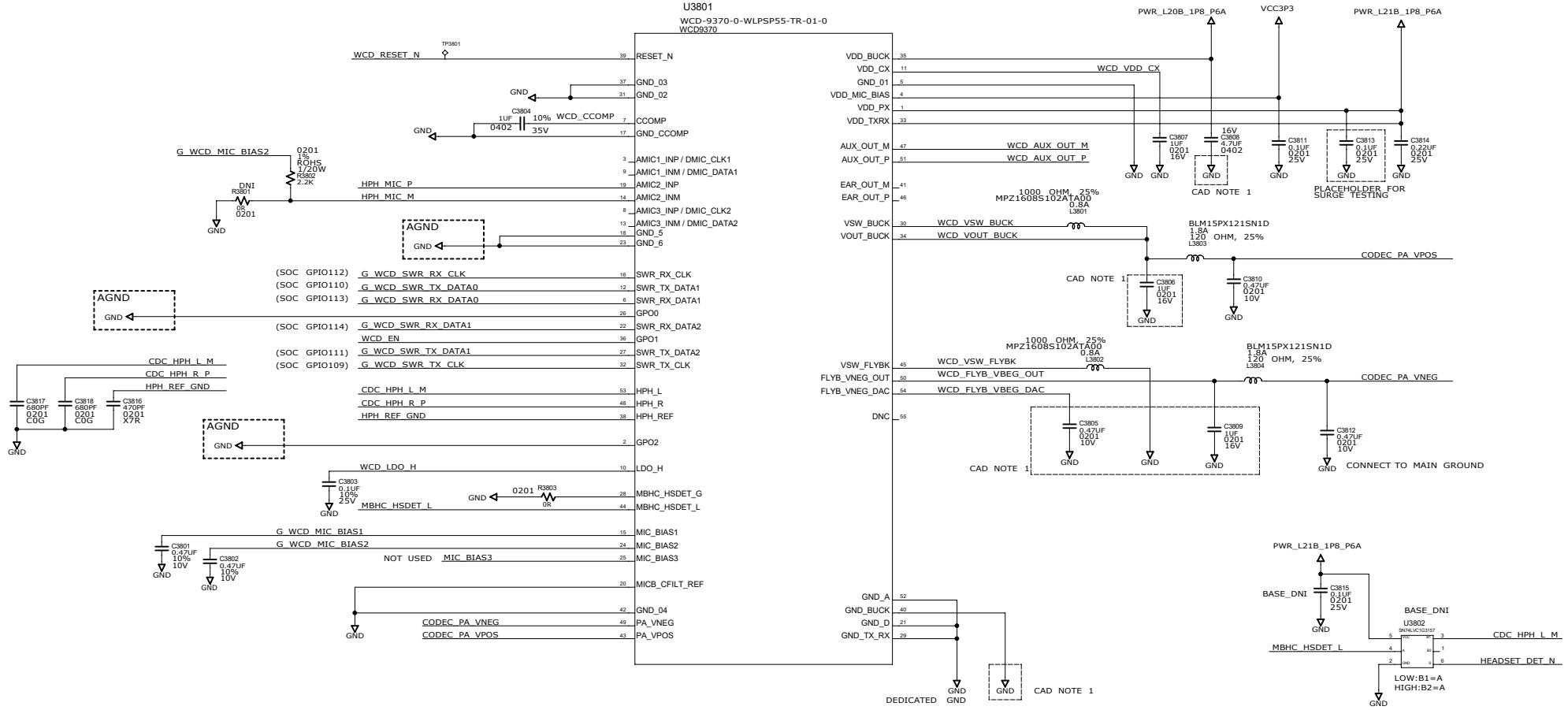

CAD NOTE 1: FLYBACK/BUCK GROUNDISLAND

ZEBRA CONFIDENTIAL

ZEBRA TECHNOLOGIES CORP.
HOLTSVILLE, NEW YORK 11742

$STI_TITLE_1
AUDIO CODEC WCD9370

SIZE	DWG. NO.	REV
D	$STI_DRAWING_NO	$STI_REV

$CON_LAST_MODIFIED $CONTROLLED BY $TOTAL PAGES

REVISIONS							
REV	ZONE	ECN	DESCRIPTION	E.C.	BY	APVD.	DATE
			SEE SHEET 1				

CLASS D AMP AND SPK CONN.

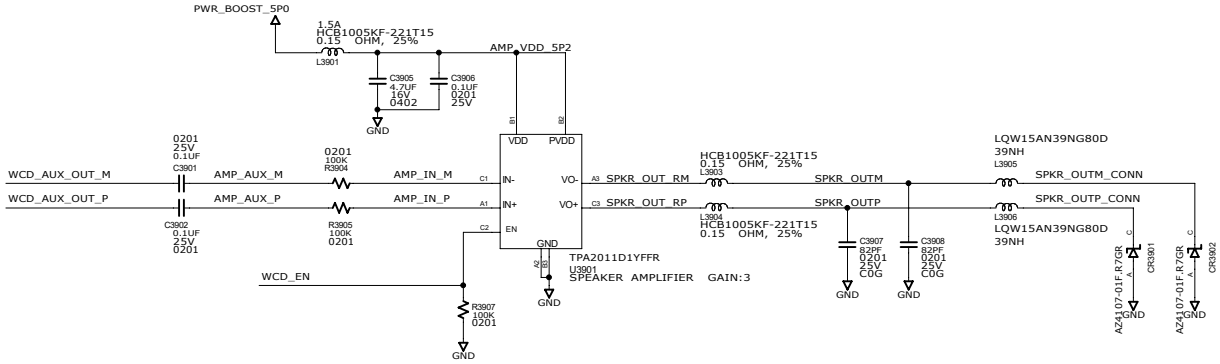

CONNECTOR

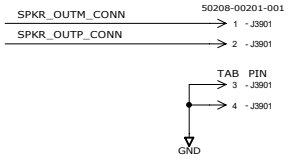

AUDIO HEADSET

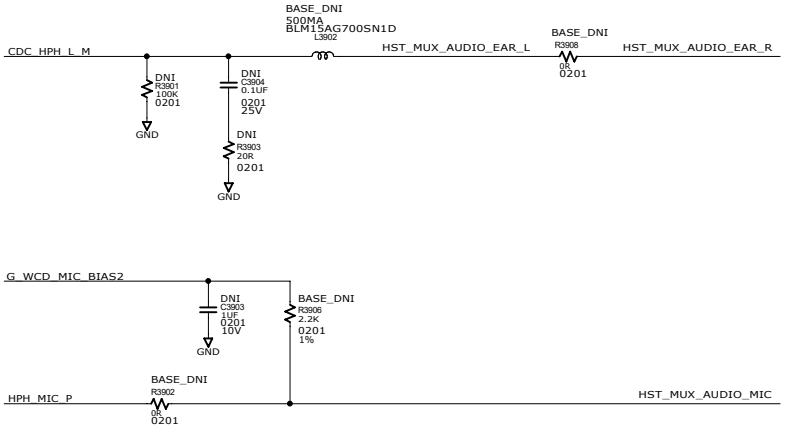

ZEBRA CONFIDENTIAL

ZEBRA TECHNOLOGIES CORP.
HOLTSVILLE, NEW YORK 11742

$STI_TITLE_1
AMP,SPK CONN.,AUDIO HEADSET

SIZE	DWG. NO.	REV
D	$STI_DRAWING_NO	$STI_REV

$CON_LAST_MODIFIED $CON_TOTAL_PAGES

I/O CONN. CONTROL

REVISIONS							
REV	ZONE	ECN	DESCRIPTION	E.C.	BY	APVD.	DATE
			SEE SHEET 1				

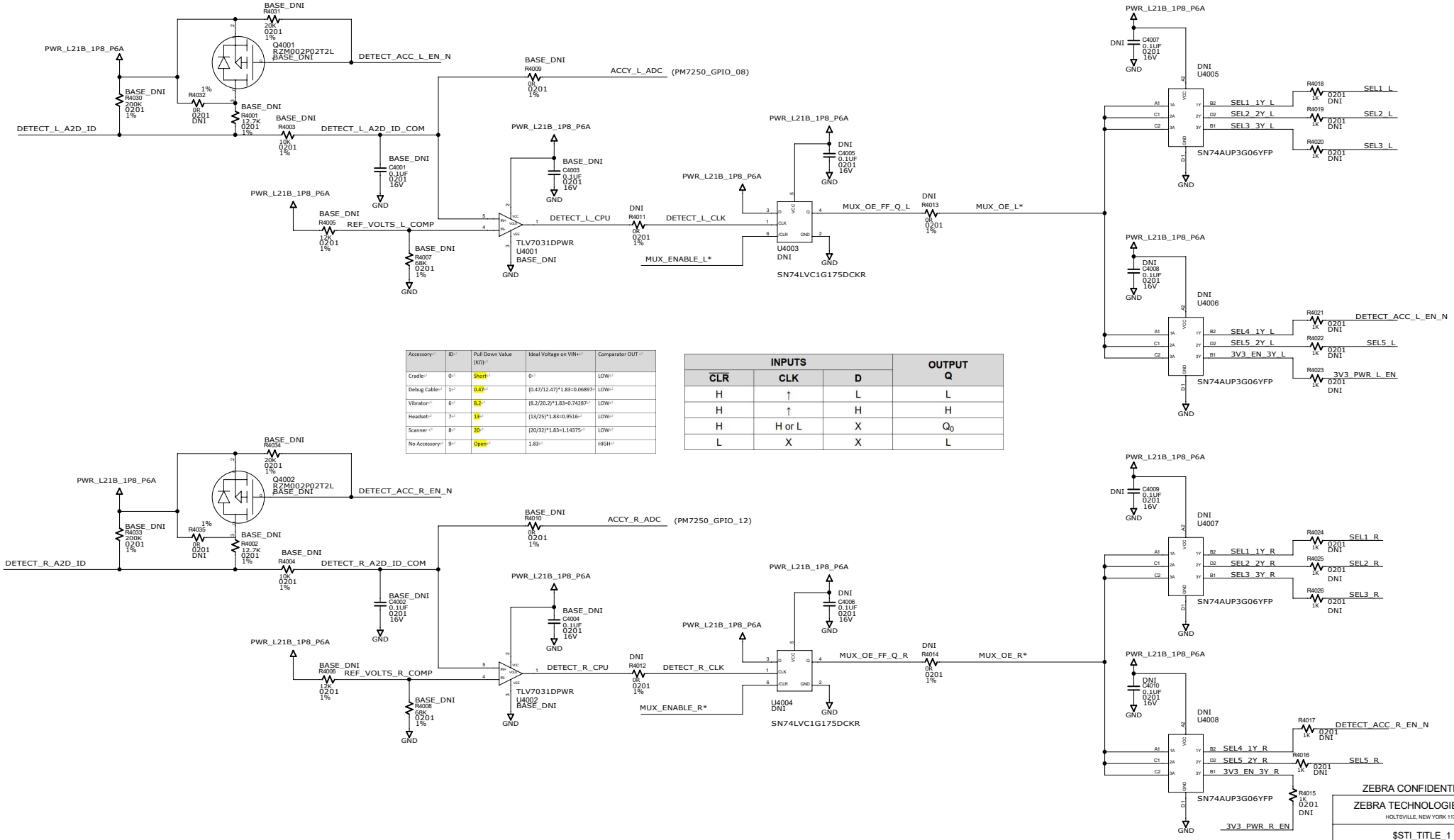

Accessory	ID	Pull Down Value (KΩ)	Ideal Voltage on VIN+	Comparator OUT
Cradle	0	Short	0	LOW
Debug Cable	1	0.47	(0.47/12.47)*1.83=0.06897	LOW
Vibrator	6	8.2	(8.2/20.2)*1.83=0.74287	LOW
Headset	7	13	(13/25)*1.83=0.9516	LOW
Scanner	8	20	(20/32)*1.83=1.14375	LOW
No Accessory	9	Open	1.83	HIGH

INPUTS			OUTPUT
$\overline{CLR}$	CLK	D	Q
H	↑	L	L
H	↑	H	H
H	H or L	X	Q_0
L	X	X	L

ZEBRA CONFIDENTIAL

ZEBRA TECHNOLOGIES CORP.

HOLTSVILLE, NEW YORK 11742

$STI_TITLE_1

I/O CONN. CONTROL

SIZE	DWG. NO.	REV
D	$STI_DRAWING_NO	$STI_REV

$CON_LAST_MODIFIED $CON_SHEET_NUMBER OF $CON_TOTAL_PAGES

I/O CONN.LEFT SIDE

REVISIONS							
REV	ZONE	ECN	DESCRIPTION	E.C.	BY	APVD.	DATE
			SEE SHEET 1				

DC POWER

POWER_IN_L_CONN — GMLB-160808-0033P-N8H 3000MA 33 OHM, 25% L4101 — POWER_IN_L
C4101 0.1UF 0201 25V; C4102 4.7UF 0402 16V; GND

LEFT RUGGED I/O CONNECTOR

BASE_DNI
BM23PF0.8-20DS-0.35V(51)

J4101-1 UART_L_RXD_3P3_CONN
J4101-6 HPH_L_VIB_L_TX_L_CONN
J4101-8 USB+_L_HW_TRIG_L_PTT_L_CONN TP4102
J4101-9 USB-_L_RTS_L_CONN TP4101
J4101-14 MIC_L_CTS_L_USB_ID_L_CONN TP4103
J4101-19 DETECT_L_A2D_ID_CONN TP4110 TP4111 TP4112
J4101-21 POWER PINS
J4101-24 POWER_IN_L_RUG_CONN TP4107 TP4108 TP4109
J4101-22 PWR_OUT_L_USB_PWR_L_CONN TP4104 TP4105 TP4106
J4101-23 GND

CR4101 AZ5413-01F; CR4102 AOZ8502BDS-03; TL4101; CR4103 AOZ8502BDS-03; CR4104 AZ5413-01F; CR4113 AZ5413-01F; CR4114 AOZ8502BDS-03; CR4105 AZ5413-01F; CR4111 AZ5413-01F

MIC_L_CTS_L_USB_ID_L_CONN — L4103 BLM18AG102SH1D
HPH_L_REF_GND_CONN — L4104 BLM18AG102SH1D — HPH_L_REF_GND
HPH_L_VIB_L_TX_L_CONN — L4105 BLM18AG102SH1D — HPH_L_VIB_L_TX_L
DETECT_L_A2D_ID_CONN — L4106 BLM15AG121SN1D — DETECT_L_A2D_ID
UART_L_RXD_3P3_CONN — L4107 BLM15AG121SN1D — UART_L_RXD_3P3

FOR DIO3203LN12

SEL1	SEL0	FUNCTION
0	0	NO CONNECTION
0	1	COM+CONNECTEDTO DP1+ COM- CONNECTEDTO DM1-
1	0	COM+CONNECTEDTO DP2+ COM- CONNECTEDTO DM2-
1	1	COM+CONNECTEDTO R COM- CONNECTEDTO L

VCC4P0 — CR4115 RB520S-30DP-TP — C4109 1UF 0201 16V — GND

U4106 BASE_DNI NX3L2467GU,115 — VCC
SEL2_L — R4104 0201 0R
SEL5_L — R4106 0201 0R
MIC_L_CTS_L_USB_ID_L — HST_MUX_AUDIO_MIC
UART_L_CTS_3P3 — OTG_ID

U4107 BASE_DNI 74LVC2T45GN,115
UART_L_TXD — UART_L_TXD_3P3
UART_L_RTS_OUT — UART_L_RTS_3P3

U4108 BASE_DNI SN74LVC2G17DSFR
UART_L_RXD_3P3 — UART_L_RXD — PWR_L21B_1P8_P6A
UART_L_CTS_IN — C4114 0.1UF 0201 25V

VCC3P3 — C4111 0.1UF 0201 25V; PWR_L21B_1P8_P6A — C4112 0.1UF 0201 25V

U4104 BASE_DNI DIO3203LN12
COM-; COM+; HST_MUX_AUDIO_EAR_L; HPH_REF_GND; VIBRATOR; UART_L_TXD_3P3; SEL2_L; SEL3_L

FOR NX3L2467

1S	0	1Y0=1Z & 2Y0=2Z
	1	1Y1=1Z & 2Y1=2Z
2S	0	3Y0=3Z & 4Y0=4Z
	1	3Y1=3Z & 4Y1=4Z

U4109 BASE_DNI FSUSB42UMX — VCC3P3 — C4110 0.1UF 0201 25V
HSD1+ — HW_TRIG_L_PTT_L; HSD2+ — USB+_L; HSD1- — UART_L_RTS_3P3; HSD2- — USB-_L; SEL — SEL1_L; OE* — MUX_OE_L*

ICMF062P900MFR U4101 BASE_DNI
USB+_L_HW_TRIG_L_PTT_L_CONN — USB+_L_HW_TRIG_L_PTT_L
USB-_L_RTS_L_CONN — USB-_L_RTS_L
CR4106 AZ5413-01F; CR4107 AZ5413-01F; CR4109 AZ5413-01F; CR4110 AZ5413-01F

R4109, R4110 MUST CLOSE TO U4110

U4110 BASE_DNI DIO3303LN12 — VCC3P3 — C4113 0.1UF 0201 25V
SEL0_OTG — R4107 1% 1K — SEL0_OTG_R
SEL1_OTG — R4108 1% 1K — SEL1_OTG_R
OTG_DP_DBG; OTG_DN_DBG; USB+_R; USB-_R
BASE_USB_DP — PRE_PRE+_DNI R4109 0R — USB0_HS_DP
BASE_USB_DM — PRE_PRE+_DNI R4110 0R — USB0_HS_DM

FOR FSUSB42UMX

SEL	OE*	FUNCTION
X	HIGH	DISCONNECT
LOW	LOW	D+=HSD1+, D-=HSD1-
HIGH	LOW	D+=HSD2+, D-=HSD2-

FOR DIO3303LN12

SEL1	SEL0	FUNCTION	
0	0	DISCONNECT	
0	1	COM+=D1+, COM-=D1-	DEBUG
1	0	COM+=D2+, COM-=D2-	IO_L
1	1	COM+=D3+, COM-=D3-	IO_R

LEFT DC CHARGE PADS

POWER_IN_L_CONN — USI-19G LPAD_P-1 TP4113; TP4114; USI-19G LPAD_G-1 TP4115; GND

USB POWER

PWR_OUT_L_USB_PWR_L_CONN — GMLB-160808-0033P-N8H 3000MA 33 OHM, 25% L4102 — PWR_OUT_L_USB_PWR_L
C4103 0.1UF 0201 25V; C4104 4.7UF 0402 16V; CR4108 PESD12VV1BL; GND

PWR_OUT_L_USB_PWR_L — U4102 DIO7553CD6 — C4105 0.1UF 0201 25V; C4121 10UF 0402 10V; PWR_BOOST_5P0
OTG_L_ICL; USB_L_HOST_PWR_ON; OTG_L_PWR_EN; FAULT; R4111 0R 0201; R4101 100K 0201; R4112 24K 0201
I=25752/24000=1.073A

PWR_L21B_1P8_P6A — C4108 0.1UF 0201 25V — U4105 NC7SZ08L6X — USB0_TYPEC_EN_SW; SEL1_L

R4153 0R 0805 DNI 1%; Q4101 SIA445EDJ-T1-GE3; R4151 100K 0201 1%; Q4102 NX7002BKH; R4152 100K 0201; C4120 DNI 0201 50V; R4103 10K 0201; CR4116 PESD12VV1BL

VCC3P3 — C4106 0.1UF 0201 25V; C4122 10UF 0402 10V
U4103 BASE_DNI DIO7553CD6 — 3V3_L_ICL; 3V3_L_EN; 3V3_PWR_L_EN; R4113 0R 0201; R4102 100K 0201; R4114 24K 0201
I=25752/24000=1.073A

ZEBRA CONFIDENTIAL

ZEBRA TECHNOLOGIES CORP.
HOLTSVILLE, NEW YORK 11742

$STI_TITLE_1
RUGGED I/O CONN. LEFT SIDE

SIZE	DWG. NO.	REV
D	$STI_DRAWING_NO	$STI_REV

$CON_LAST_MODIFIED — $CONFIDENTIAL — $TOTAL_PAGES

I/O CONN.RIGHT SIDE

REVISIONS							
REV	ZONE	ECN	DESCRIPTION	E.C.	BY	APVD.	DATE
			SEE SHEET 1				

DC POWER

POWER_IN_R_CONN — GMLB-160808-0033P-N8H 3000MA 33 OHM, 25% L4201 — POWER_IN_R_CONN

C4203 0.1UF 0201 25V; C4204 4.7UF 0402 16V; GND

FOR DIO3203LN12

SEL1	SEL0	FUNCTION
0	0	NO CONNECTION
0	1	COM+ CONNECTED TO DP1+ COM- CONNECTED TO DM1-
1	0	COM+ CONNECTED TO DP2+ COM- CONNECTED TO DM2-
1	1	COM+ CONNECTED TO R COM- CONNECTED TO L

FOR NX3L2467

1S	0	1Y0=1Z & 2Y0=2Z
	1	1Y1=1Z & 2Y1=2Z
2S	0	3Y0=3Z & 4Y0=4Z
	1	3Y1=3Z & 4Y1=4Z

VCC4P0 — BASE_DNI CR4215 — RB520S-30DP-TP — BASE_DNI C4211 1UF 0201 16V — GND

BASE_DNI NX3L2467GU,115 U4207

UART_R_CTS_3P3; OTG_ID; HST_MUX_AUDIO_MIC; SEL2_R; SEL5_R; MIC_R_CTS_R_USB_ID_R

BASE_DNI 0201 R4215 0R; BASE_DNI 0201 R4218 0R

BASE_DNI U4209 SN74LVC2G17DSFR: UART_R_RXD_3P3 → UART_R_RXD ==>; UART_R_CTS_IN ==>; GND; PWR_L21B_1P8_P6A; BASE_DNI C4218 0.1UF 0201 25V; GND

RIGHT RUGGED I/O CONNECTOR

BASE_DNI BM23PF0.8-20DS-0.35V(51)

J4102-1 GND; J4102-2 UART_R_RXD_3P3_CONN; J4102-3; J4102-4; J4102-5; J4102-6 HPH_R_VIB_R_TX_R_CONN; J4102-7; J4102-8 USB+_R_HW_TRIG_R_PTT_R_CONN (TP4202); J4102-9 USB-_R_RTS_R_CONN (TP4201); J4102-10; J4102-11; J4102-12; J4102-13; J4102-14 MIC_R_CTS_R_USB_ID_R_CONN (TP4203); J4102-15; J4102-16; J4102-17; J4102-18; J4102-19 DETECT_R_A2D_ID_CONN; J4102-20 (TP4216, TP4211, TP4212) GND

CR4201 AZ5413-01F; CR4202 AOZ8550B25-03; TL4102; CR4203 AOZ8550B25-03; CR4204 AZ5413-01F; CR4205 AZ5413-01F; CR4206 AZ5413-01F; CR4207 AZ5413-01F; CR4208 AZ5413-01F; CR4209 AZ5413-01F; CR4210 AZ5413-01F; CR4212 AZ5413-01F; CR4213 AZ5413-01F; CR4214 AOZ8550B25-03; CR4215 RB520S-30DP-TP

MIC_R_CTS_R_USB_ID_R_CONN — L4203 BLM18AG102SH1D; HPH_R_REF_GND_CONN — L4204 BLM18AG102SH1D; HPH_R_VIB_R_TX_R_CONN — L4205 BLM18AG102SH1D; DETECT_R_A2D_ID_CONN — L4206 BLM15AG121SN1D; UART_R_RXD_3P3_CONN — L4207 BLM15AG121SN1D — UART_R_RXD_3P3

VCC3P3 — BASE_DNI C4209 0.1UF 0201 25V — GND

BASE_DNI DIO3203LN12 U4205: COM-, COM+, VCC, GND; L/R → HST_MUX_AUDIO_EAR_R, HPH_REF_GND; D2+/D2- → VIBRATOR; D1-/D1+ → UART_R_TXD_3P3; SEL0/SEL1 → SEL2_R, SEL3_R; HPH_R_REF_GND → HPH_R_REF_GND; HPH_R_VIB_R_TX_R → HPH_R_VIB_R_TX_R; DETECT_R_A2D_ID → DETECT_R_A2D_ID

VCC3P3 — BASE_DNI C4215 0.1UF 0201 25V — GND; PWR_L21B_1P8_P6A — BASE_DNI C4217 0.1UF 0201 25V — GND

74LVC2T45GN,115 U4208 BASE_DNI: UART_R_TXD <==; UART_R_RTS_OUT <==

VCC3P3 — BASE_DNI C4212 0.1UF 0201 25V — GND

BASE_DNI U4210 FSUSB42UMX: D+, D-, OE*, VCC, GND, CONTROL; HSD1+, HSD2+, HSD1-, HSD2-, SEL; HW_TRIG_R_PTT_R, USB+_R, UART_R_RTS_3P3, USB-_R, SEL1_R; MUX_OE_R*

FOR FSUSB42UMX

SEL	OE*	FUNCTION
X	HIGH	DISCONNECT
LOW	LOW	D+=HSD1+, D-=HSD1-
HIGH	LOW	D+=HSD2+, D-=HSD2-

U4202 ICMF062P900MFR: USB+_R_HW_TRIG_R_PTT_R_CONN → USB+_R_HW_TRIG_R_PTT_R; USB-_R_RTS_R_CONN → USB-_R_RTS_R

POWER PINS: J4102-21 (TP4204, TP4205, TP4206) PWR_OUT_R_USB_PWR_R_CONN; J4102-24; J4102-22 (TP4207, TP4208, TP4209) POWER_IN_R_RUG_CONN; J4102-23

RIGHT DC CHARGE PADS

POWER_IN_R_CONN; RPAD_P - 1 USI-19G (TP4213, TP4214); RPAD_G - 1 USI-19G (TP4215); GND

USB POWER

PWR_OUT_R_USB_PWR_R_CONN — BASE_DNI GMLB-160808-0033P-N8H 3000MA 33 OHM, 25% L4202 — PWR_OUT_R_USB_PWR_R

BASE_DNI C4205 0.1UF 0201 25V; BASE_DNI C4206 4.7UF 0402 16V; BASE_DNI ROHS PESD12VV1BL CR4208; GND

R4253 0R 0805 DNI 1%; Q4201 SIA445EDJ-T1-GE3; POWER_IN_R_RUG_CONN; POWER_IN_R_CONN; R4251 100K 0201 1%; Q4202 NX7002BKH; 0201 R4252 100K; DNI C4220 0201 50V; 0201 R4220 10K; POWER_IN_R_RUG_CONN; CR4216 PESD12VV1BL

PWR_OUT_R_USB_PWR_R — OTG_R_ICL

BASE_DNI U4203 DIO7553CD6: OUT, IN, ILIM, EN, FAULT, GND, PAD; USB_R_HOST_PWR_ON; R4222 24K 0201 BASE_DNI; R4209 100K 0201 BASE_DNI; BASE_DNI C4207 0.1UF 0201 25V; BASE_DNI C4221 10UF 0402 10V; BASE_DNI R4221 0R 0201 (OTG_R_PWR_EN); GND

I=25752/24000=1.073A

PWR_BOOST_5P0; PWR_L21B_1P8_P6A — BASE_DNI C4210 0.1UF 0201 25V — GND

BASE_DNI NC7SZ08L6X U4206: USB0_TYPEC_EN_SW, SEL1_R

VCC3P3 — BASE_DNI C4208 0.1UF 0201 25V; BASE_DNI C4222 10UF 0402 10V — GND

BASE_DNI U4204 DIO7553CD6: OUT, IN, ILIM, EN, FAULT, GND, PAD; 3V3_L_ICL; 3V3_R_EN; R4224 24K 0201 BASE_DNI; R4210 100K 0201 BASE_DNI; 0201 BASE_DNI R4223 0R — 3V3_PWR_R_EN

I=25752/24000=1.073A

4P0 LDO

PWR_BOOST_5P0 — BASE_DNI C4216 1UF 0201 16V — GND

BASE_DNI U4211 TPS79901YZUR: IN, OUT, EN, FB, GND

VCC4P0 — BASE_DNI C4213 2.2UF 0201 16V — GND; C4214 4.7PF 0201 25V BASE_DNI; BASE_DNI R4211 330K 0201; BASE_DNI R4212 330K 0201 — GND

ZEBRA CONFIDENTIAL

ZEBRA TECHNOLOGIES CORP.
HOLTSVILLE, NEW YORK 11742

$STI_TITLE_1
RUGGED I/O CONN. RIGHT SIDE

SIZE	DWG. NO.	REV
D	$STI_DRAWING_NO	$STI_REV

$CON_LAST_MODIFIED $CON_TOTAL_PAGES

REV	ZONE		DESCRIPTION	E.C.	BY	APVD.	DATE
			SEE SHEET 1				

GYRO SENSOR

2ND SOURCE:
1. TDK ICM-42607-T
2. ST LSM6DSLTR

GYRO SENSOR

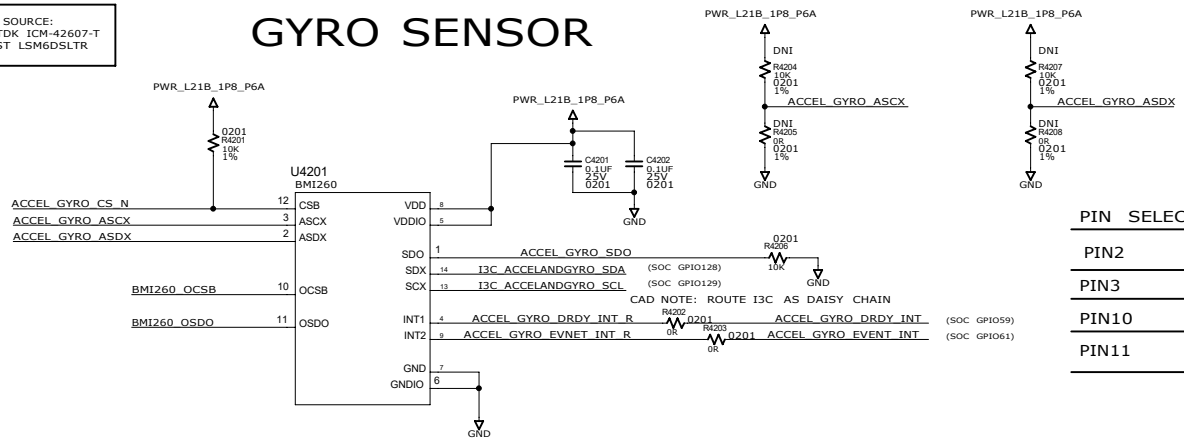

MODEL	I2C ADDRESS	NOTE
BOSCH BMI260	SDO = 0 -> 0X68	CSB = 1
TDK ICM-42607-T	AP_AD0 = 0 -> 0X68	AP_CS = 1
ST LSM6DSLTR	SDO = 0 -> 0X6A	CS= 1

PIN SELECT	BMI260	ICM-42607-T	LSM6DSLTR
PIN2	VDDIO OR NO CONNECT	VDDIO OR GND OR NO CONNECT	VDDIO OR GND
PIN3	VDDIO OR NO CONNECT	VDDIO OR GND OR NO CONNECT	VDDIO OR GND
PIN10	VDDIO OR NO CONNECT	VDDIO OR GND OR NO CONNECT	LEAVE UNCONNECTED
PIN11	VDDIO OR NO CONNECT	VDDIO OR GND OR NO CONNECT	LEAVE UNCONNECTED

LIGHT SENSOR +POWERON FPC, DMIC FPC

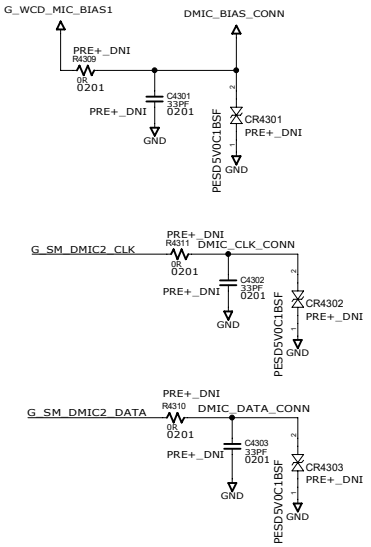

DMIC CONNECTOR

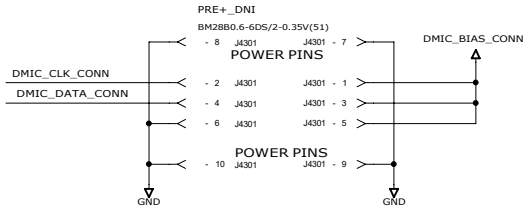

PWR ON + LIGHT SENSOR CONNECTOR

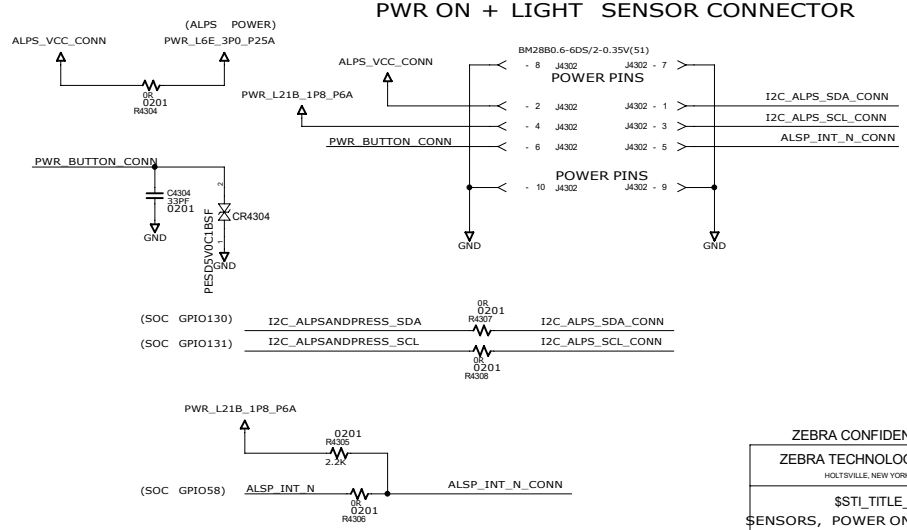

ZEBRA CONFIDENTIAL

ZEBRA TECHNOLOGIES CORP.
HOLTSVILLE, NEW YORK 11742

$STI_TITLE_1
SENSORS, POWER ON, DMIC FPC

SIZE	DWG. NO.	REV
D	$STI_DRAWING_NO	$STI_REV

$CON_LAST_MODIFIED $CURRENT_DATE PAGE $CURRENT_PAGE OF $TOTAL_PAGES

FRONT CAMERA CONNECTOR

REVISIONS							
REV	ZONE	ECN	DESCRIPTION	E.C.	BY	APVD.	DATE
			SEE SHEET 1				

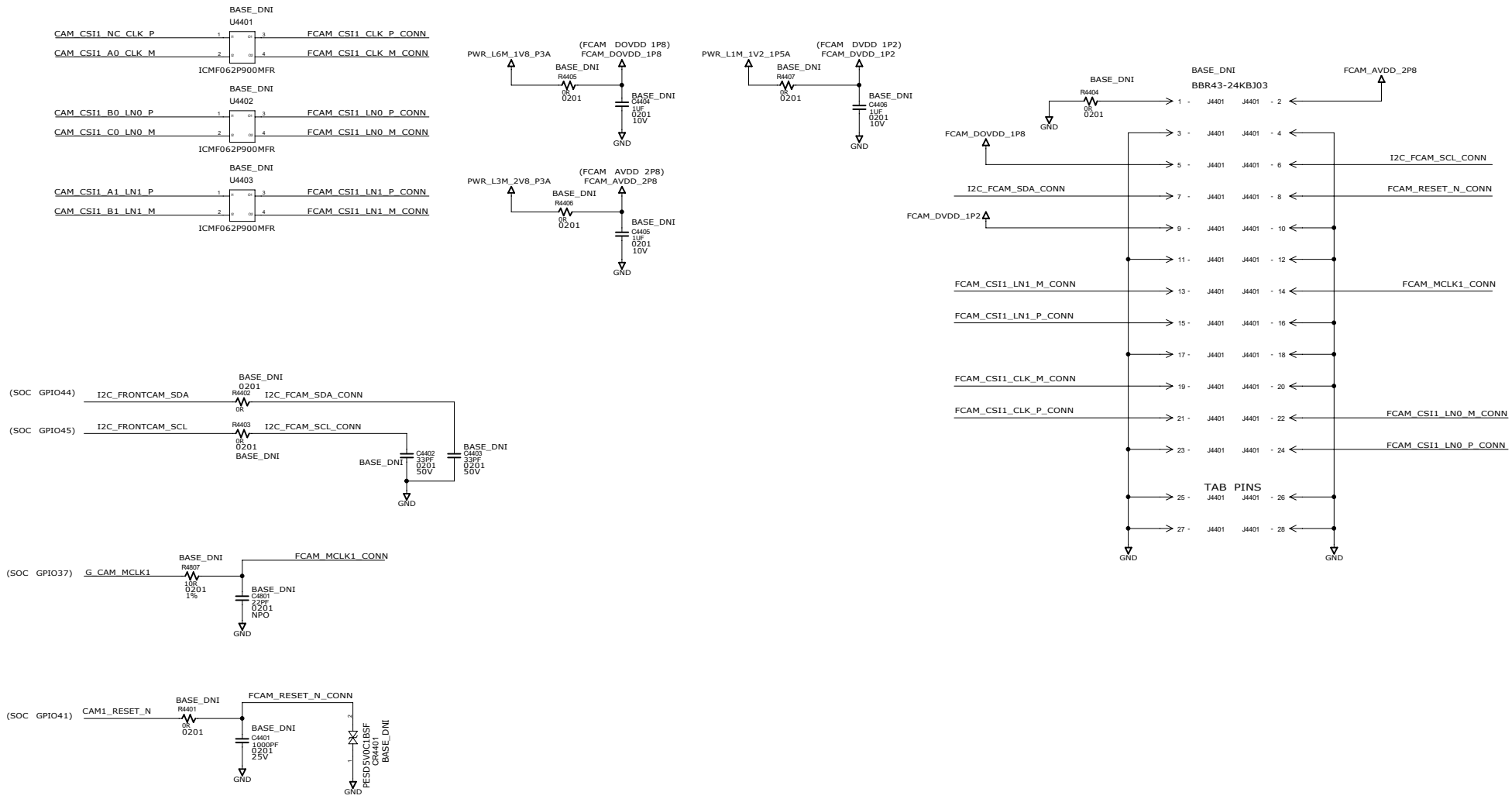

ZEBRA CONFIDENTIAL

ZEBRA TECHNOLOGIES CORP.
HOLTSVILLE, NEW YORK 11742

$STI_TITLE_1
FRONT CAMEAR CONN.

SIZE	DWG. NO.	REV
D	$STI_DRAWING_NO	$STI_REV

$CON_LAST_MODIFIED $CON_SHEET_NO OF $CON_TOTAL_PAGES

SIDE CAMERA CONNECTOR

REVISIONS							
REV	ZONE	ECN	DESCRIPTION	E.C.	BY	APVD.	DATE
			SEE SHEET 1				

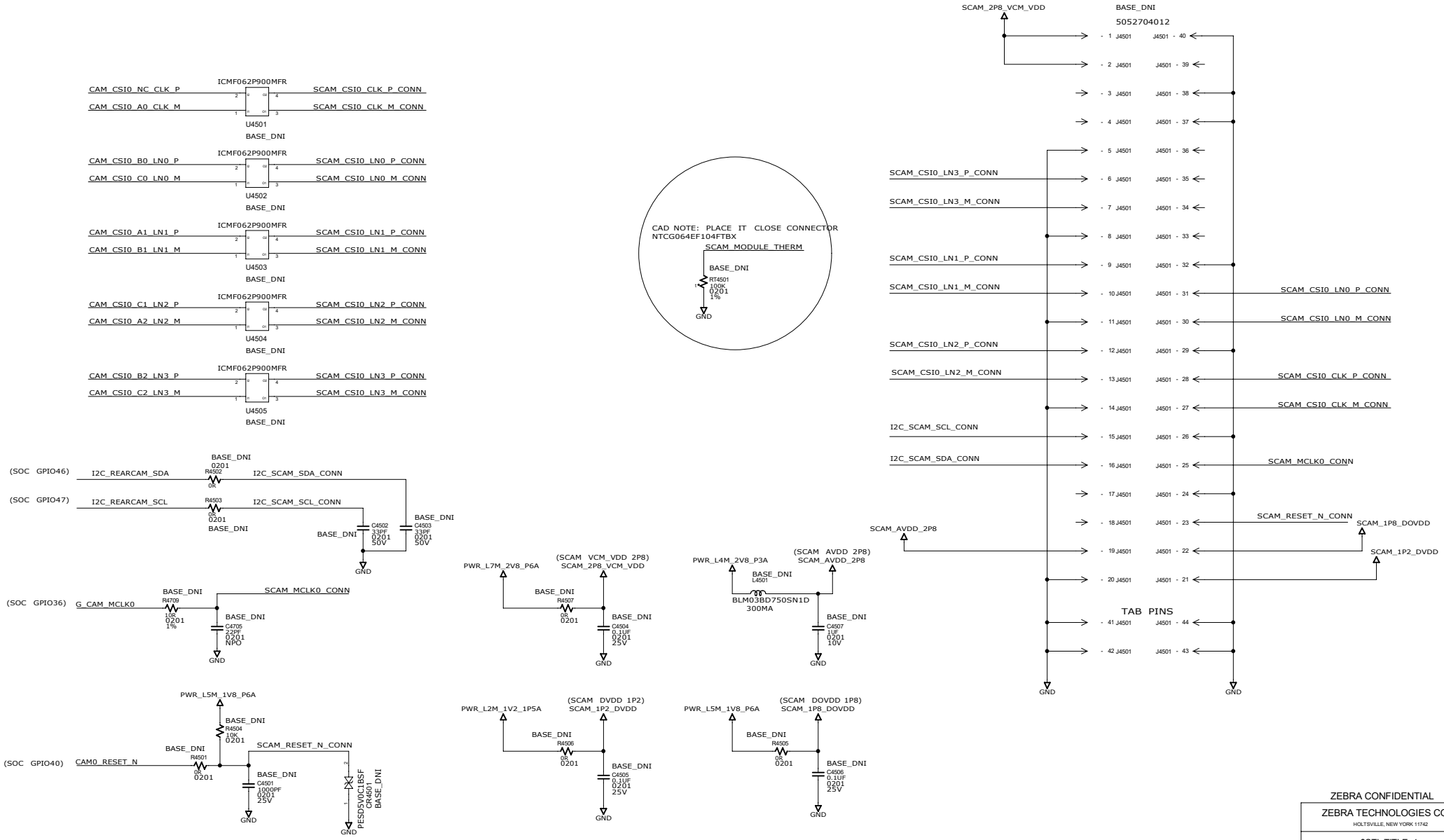

ZEBRA CONFIDENTIAL

ZEBRA TECHNOLOGIES CORP.
HOLTSVILLE, NEW YORK 11742

$STI_TITLE_1
SIDE CAMERA CONNECTOR

SIZE	DWG. NO.	REV
D	$STI_DRAWING_NO	$STI_REV

$CON_LAST_MODIFIED $CURRENT_DATE SHEET $CURRENT_SHEET OF $TOTAL_PAGES

SHIELDING/SCREW HOLES/NPTH/PTH

REVISIONS							
REV	ZONE	ECN	DESCRIPTION	E.C.	BY	APVD.	DATE
			SEE SHEET 1				

PTH

TOOL1-9T_4-2C_FILM
TOOL4607
GND

TOOL1-9T_6T4-2BC_FILM
TOOL4603
GND

TOOL1-9T_6T4-2BC_FILM
TOOL4604
GND

TOOL1-9T_6T4-2BC_FILM
TOOL4605
GND

TOOL1-9T_6T4-2BC_FILM
TOOL4606
GND

NPTH

D126X146_NPTH
TOOL4601

D2MM700U1_20
TOOL4602

PADS FOR GND

PAD5_258X5_52MM_FILM_6MIL
TOOL4612
GND

SHIELDING CAM

TOP SIDE

SHIELD_55_44X32_961MM_FILM
TOOL4608
GND

TOOL4609
SHIELD_25_3664X30_4211MM_FILM
WIFI
GND

BOT SIDE

SHIELD_17_3X27MM_FILM
TOOL4610
GND

SHIELD_71_696X27MM_FILM
TOOL4611
GND

ZEBRA CONFIDENTIAL

ZEBRA TECHNOLOGIES CORP.
HOLTSVILLE, NEW YORK 11742

$STI_TITLE_1
SHIELDING/SCREW HOLES/NPTH

SIZE	DWG. NO.	REV
D	$STI_DRAWING_NO	$STI_REV

$CON_LAST_MODIFIED $CON_TOTAL_PAGES

ELEMENT SECURE

REVISIONS							
REV	ZONE	ECN	DESCRIPTION	E.C.	BY	APVD.	DATE
			SEE SHEET 1				

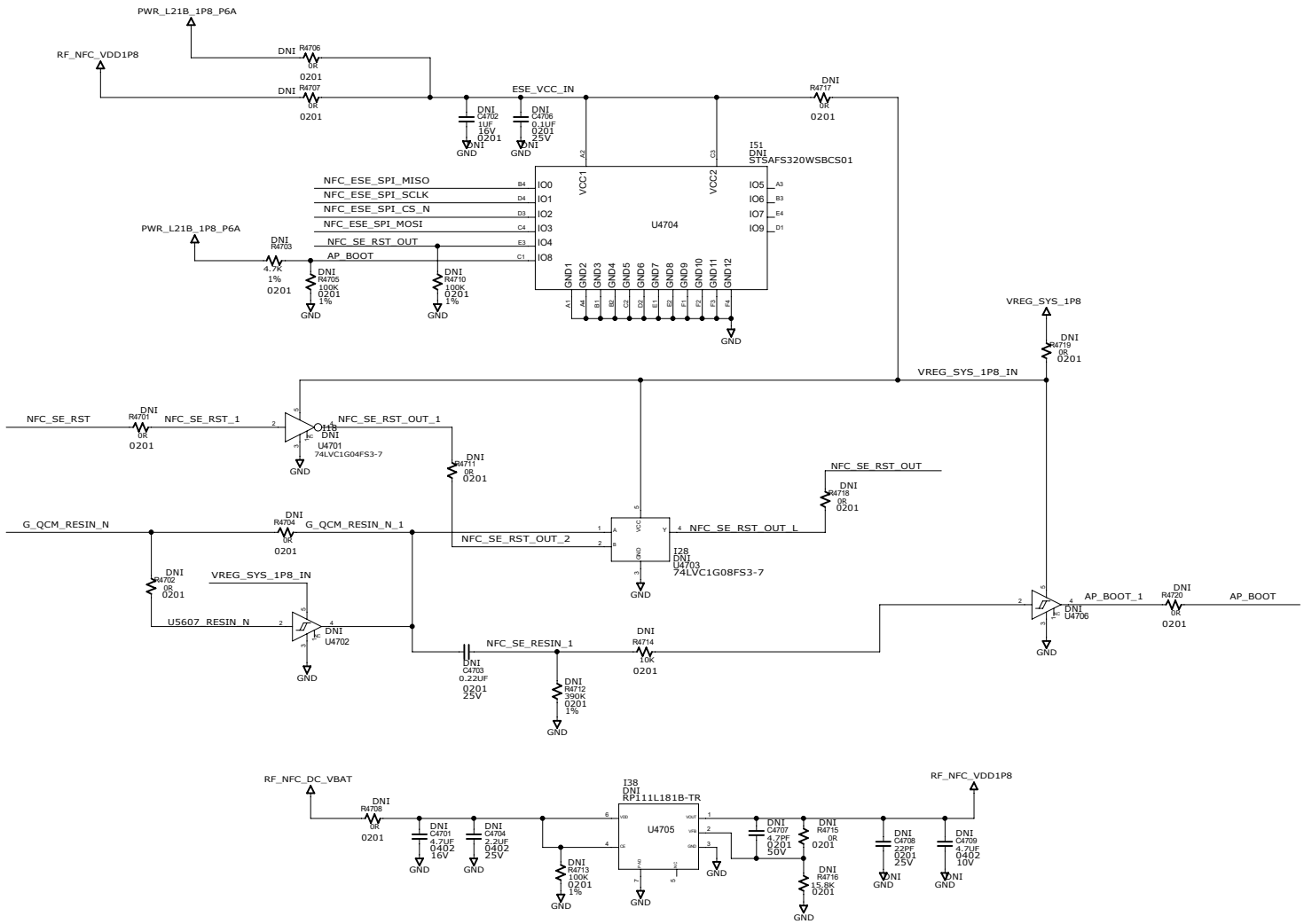

ZEBRA CONFIDENTIAL

ZEBRA TECHNOLOGIES CORP.
HOLTSVILLE, NEW YORK 11742

$STI_TITLE_1
ELEMENT SECURE

SIZE	DWG. NO.	REV
D	$STI_DRAWING_NO	$STI_REV

$CON_LAST_MODIFIED $CON_SHEET OF $CON_TOTAL_PAGES

DEBUG CONNECTOR

REVISIONS							
REV	ZONE	ECN	DESCRIPTION	E.C.	BY	APVD.	DATE
			SEE SHEET 1				

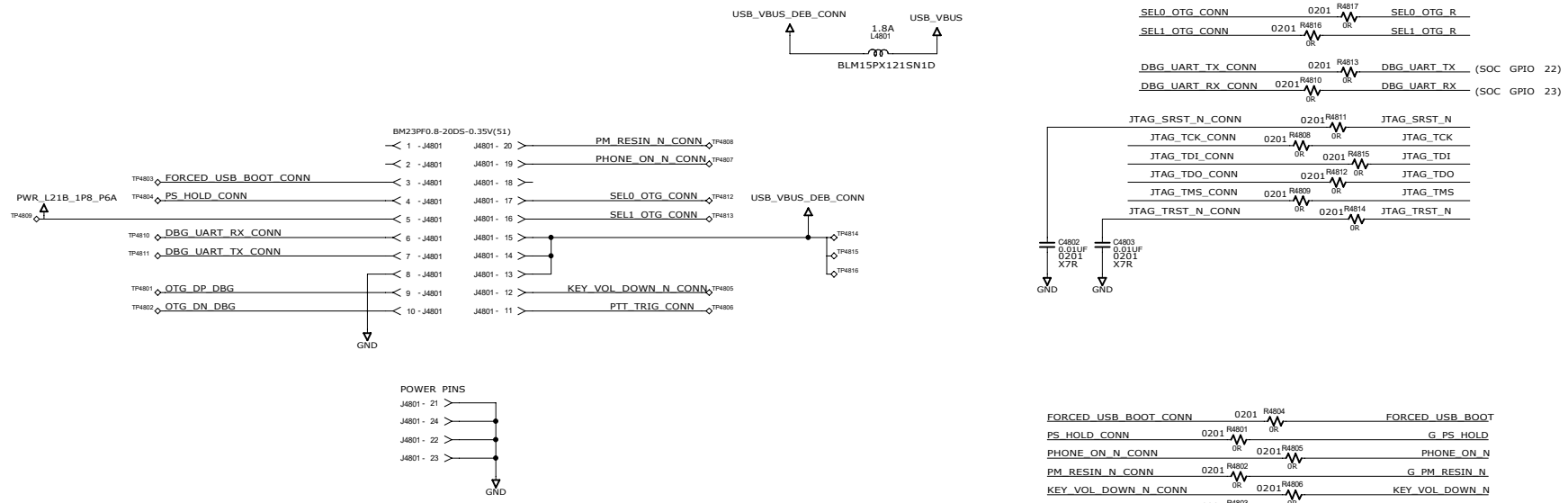

ZEBRA CONFIDENTIAL

ZEBRA TECHNOLOGIES CORP.
HOLTSVILLE, NEW YORK 11742

$STI_TITLE_1
DEBUG CONNECTOR

SIZE	DWG. NO.	REV
D	$STI_DRAWING_NO	$STI_REV

$CON_LAST_MODIFIED $CON_SHEET OF $CON_TOTAL_PAGES

OM9716 NFC

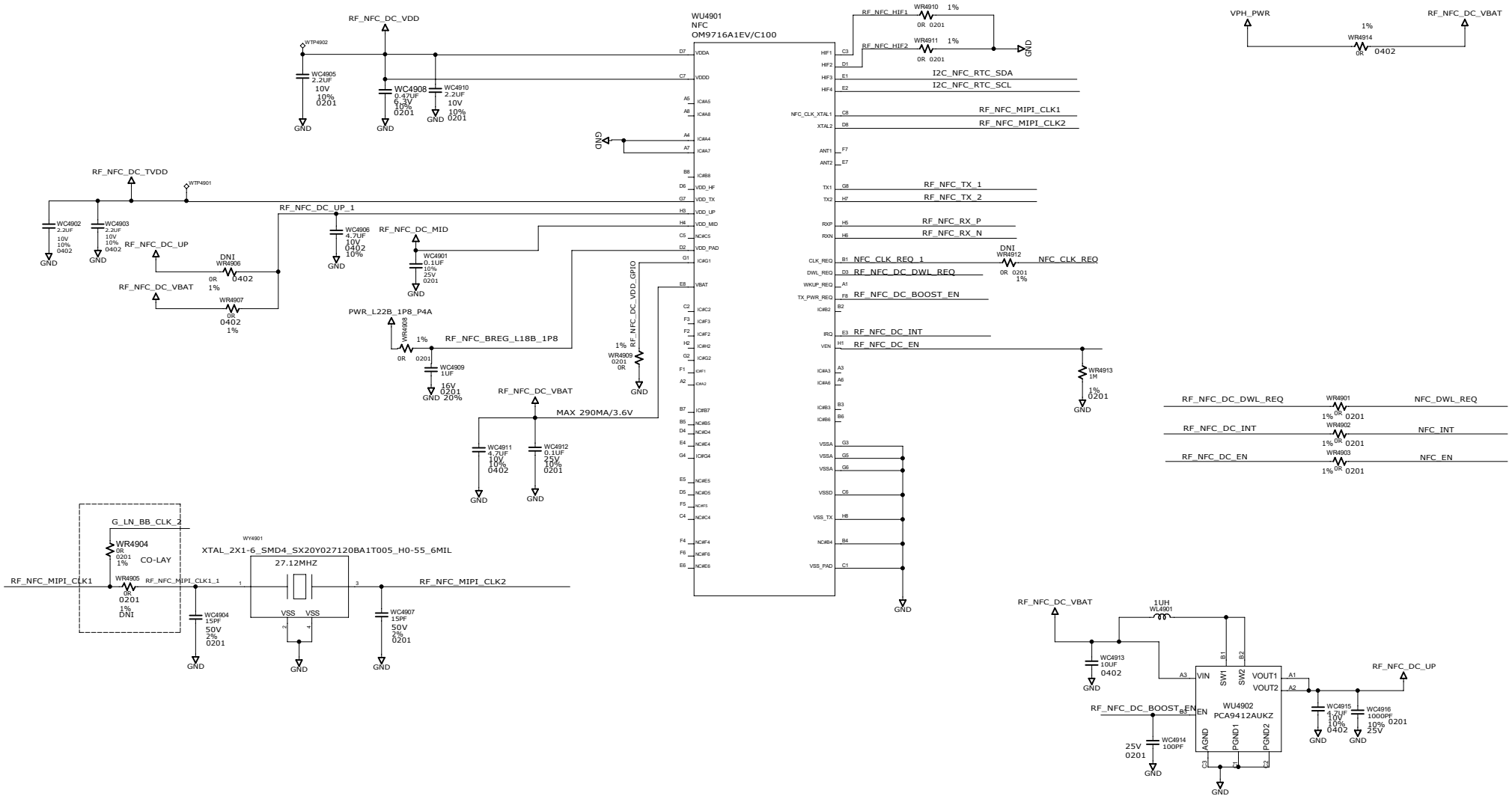

REV	ZONE	NO.	DESCRIPTION	E.C.	BY	APVD.	DATE
			SEE SHEET 1				

ZEBRA TECHNOLOGIES CORP.
HOLTSVILLE, NEW YORK 11742

QUASAR MAIN BOARD
OM9716 NFC

SIZE	DWG. NO.	REV
D	TBD	V18

Fri Nov 17 17:40:11 2023 SHEET 49 OF 61

OM9716 NFC

REV	ZONE		DESCRIPTION	E.C.	BY	APVD.	DATE
			SEE SHEET 1				

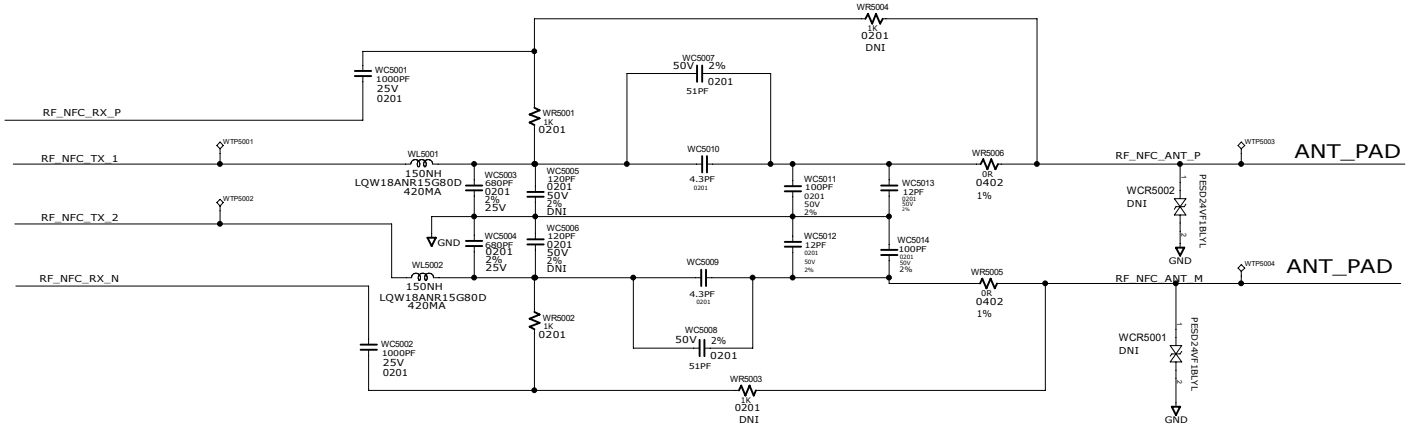

WL9301 & WL9302 RATED CURRENT 420MA

Release for		PT	
Date		2022/10/14	
Matching Circuit	BOM		
L0	WL9301、WL9302	150nH	MURATA LQW18ANR15G80D
C0a	WC9303、WC9304	680pF	MURATA GRM0335C1H681JE01D
C0b	WC9305、WC9306	DNI	
C1a	WC9307、WC9308	43pF	MURATA GRM0335C1H430GA1D
C1b	WC9309、WC9310	1.5pF	MURATA GRM0335C1H1R5CA1D
C2a	WC9311、WC9314	100pF	MURATA GRM0335C1H101GA1D
C2b	WC9312、WC9313	27pF	MURATA GRM0335C1H270GA1D
Rrx_filter	WR9304、WR9305	1KΩ	WALSIN CHIP RES 1K 1% 200PPM 0201 1/20W
Rrx_ant	WR9306、WR9307	DNI	
Rdamp	WR9308、WR9309	0Ω	YAGEO CHIP RES 0 1% 200PPM 0201 1/20W

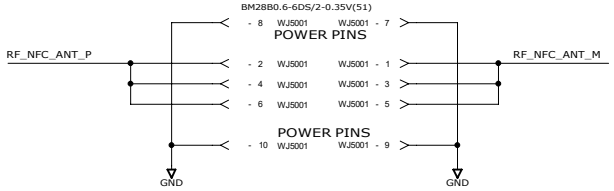

ZEBRA TECHNOLOGIES CORP.
HOLTSVILLE, NEW YORK 11742

QUASAR MAIN BOARD
NFC ANTENNA

SIZE	DWG. NO.	REV
D	TBD	V18

Fri Nov 17 17:40:12 2023 SHEET 50 OF 61

REV	ZONE	ECN	DESCRIPTION	E.C.	BY	APVD.	DATE
			SEE SHEET 1				

RESERVE PAGE

ZEBRA TECHNOLOGIES CORP.
HOLTSVILLE, NEW YORK 11742

QUASAR MAIN BOARD
RESEERVE PAGE

SIZE	DWG. NO.	REV
D	TBD	V18

Mon Aug 28 15:12:08 2023 SHEET 51 OF 61

REV	ZONE		DESCRIPTION	E.C.	BY	APVD.	DATE
			SEE SHEET 1				

WLAN BLOCKDIGRAM
WCN6856 HP12B

POWER
PWR_S7B_1P112_P6A
PWR_L21B_1P8_P6A
PWR_S8B_1P352_4A
PWR_S9B_1P872_2P1A
VPH_PWR

CONTROL
BT_EN
WLAN_EN
WCN_SW_CTRL
LAA_RX
PA_MUTING
RF_WL_TX_EN_TO_N79
RF_WL_N79_TX_EN_TO_WLAN
MOS_AS_EN

BT
RF_45_BT_SLIMBUS_DATA
RF_45_BT_SLIMBUS_CLK
BT_UART_TX
BT_UART_RX
BT_UART_RFR
BT_UART_CTS
BLE_UART_TX
BLE_UART_RX

PCIE
RF_100_WL_PCIE20_RFECLK_P
RF_100_WL_PCIE20_RFECLK_M
RF_100_WL_PCIE20_RXP
RF_100_WL_PCIE20_RXM
RF_100_WL_PCIE20_TXP_1
RF_100_WL_PCIE20_TXM_1
PCIE0_CLK_REQ_N
PCIE0_RESET_N
PCIE0_WAKE_N

CLOCK
G_SLEEP_CLK

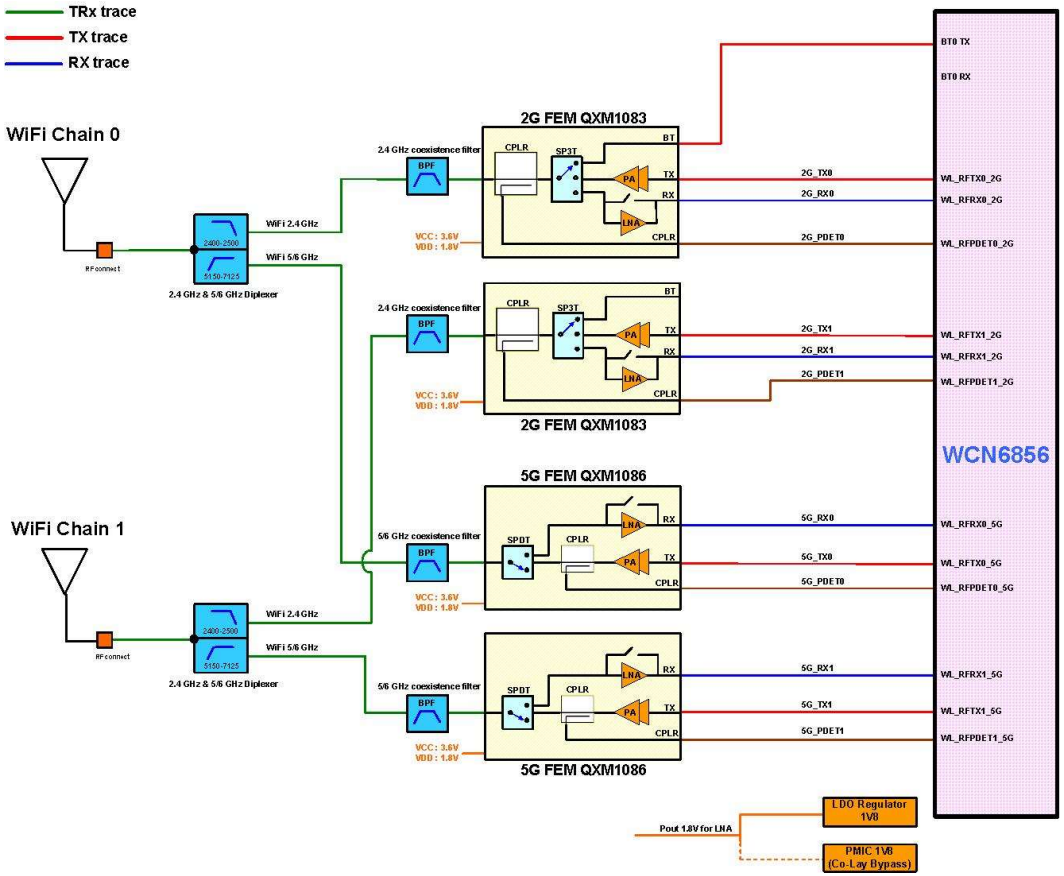

WLAN 2-WIRE UART INTERFACES
HOST2WLAN_SOL
WLAN2HOST_SOL

ZEBRA CONFIDENTIAL

ZEBRA TECHNOLOGIES CORP.
HOLTSVILLE, NEW YORK 11742

$STI_TITLE_1
WLAN BLOCK DIAGRAM

SIZE	DWG. NO.	REV
D	$STI_DRAWING_NO	$STI_REV

$CON_LAST_MODIFIED

WCN6856_PWR

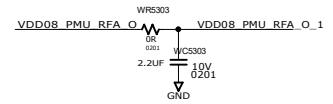

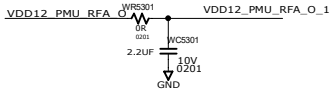

VDD12_WLBBPLL NEEDS GOOD ISOLATION FROM BB (1.2V), VCO/BTPA (1.7V), AND RX (0.8V)

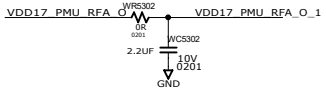

VDD17_WLSYN5G_VCONEEDS GOOD ISOLATION FROM THE REST OF THE POWER RAILS

WCN6856
WCN-6856-1-NSP288-TR-02-1
MFG_NO
WU5301

BLOCKID
RFA_PWR_GND1

VDD08_PMU_RFA_CMN — 25V 0201 WC5317 0.1UF GND
VDD08_PMU_RFA_O_1 — WC5315 100PF 25V 0201 GND F22
VDD08_PMU_RFA_O_1 — WC5304 2.2UF 10V 0201 GND; WC5316 100PF 25V 0201 GND D16; WC5321 2.2PF 50V 0201 GND E7; WC5328 100PF 25V 0201 GND H4
VDD08_PMU_RFA_O_1 — WC5312 2.2UF 10V 0201 GND; WC5318 100PF 25V 0201 GND
F6 NEEDS GOOD ISOLATION WITH OTHER POWER
VDD12_PMU_RFA_O_1 — WC5313 2.2UF 10V 0201 GND; WC5319 100PF 25V 0201 GND
VDD12_PMU_RFA_O_1 — WC5314 2.2UF 10V 0201 GND; WC5320 100PF 25V 0201 GND
VDD12_PMU_RFA_O_1 — WC5308 2.2UF 10V 0201 GND; WC5322 100PF 25V 0201 GND H16
VDD12_PMU_RFA_O_1 — WC5305 2.2UF 10V 0201 GND; WC5323 100PF 25V 0201 GND H8
L11 NEEDS GOOD ISOLATION WITH OTHER POWER
VDD12_PMU_RFA_O_1 — WC5306 100PF 25V 0201 GND L11; WC5324 100PF 25V 0201 GND L7
VDD17_PMU_RFA_O_1 — WC5307 100PF 25V 0201 GND D18; WC5325 100PF 25V 0201 GND F8
VDD17_PMU_RFA_O_1 — WC5309 100PF 25V 0201 GND
H6 NEEDS GOOD ISOLATION WITH OTHER POWER
VDD17_PMU_RFA_O_1 — WC5310 2.2UF 10V 0201 GND; WC5326 100PF 25V 0201 GND
VDD17_PMU_RFA_O_1 — WC5311 0.01UF 25V 0201 GND; WC5327 100PF 25V 0201 GND

GND_BTADDA_CH01 J19 — GND_BTBB_CH0 E21 — GND_BTPA_BALUN_CH0 A21 — GND_BTPA_CH0 B22 — GND_BTRX_CH0 C21 — GND_BTSYN G19 — GND_WLRX2G_CH0 F16 — GND_WLRX2G_CH1 E13 — GND_WLRX5G_CH0 D8 — GND_WLRX5G_CH1 E3 — GND_WLTX2G_CH0 E17 — GND_WLTX2G_CH1 E11 — GND_WLTX5G_CH0 E9 — GND_WLTX5G_CH1 E1 — GND_WLADDA2G_CH0 J17 — GND_WLADDA2G_CH1 J11 — GND_WLADDA5G_CH0 J9 — GND_WLADDA5G_CH1 J3 — GND_WLBB2G_CH0 G17 — GND_WLBB2G_CH1 G11 — GND_WLBB5G_CH0 G7 — GND_WLBB5G_CH1 G3 — GND_WLBBPLL K10 — GND ADC/DAC + BBPLL
GND_WLSYN2G_PLL J15 — GND_WLSYN2G_VCO H14 — GND_WLSYN2G_LOGEN F14
GND_WLLPSYN5G E5 — GND_WLSYN5G_VCO J7 — GND_WLSYN5G_LOGEN G5 — GND GND_WLLPSYN5G
GND_RFA_CMN0 L15 — GND_RFA_CMN1 L5 — GND_XTAL G21 — GND GND_XTAL
GND_ISO_0 F10 — GND_ISO_1 H18 — GND_ISO_2 K6
GND_SR_0 D10 — GND_SR_1 J23 — GND_SR_3 L1 — GND RF/BB: 2G, 5G, BT
GND_ISO_WALL_0 J21 — GND_ISO_WALL_1 L17 — GND_ISO_WALL_2 K8 — GND_ISO_WALL_3 L3 — GND DIGITAL GND

N19 : BT_USB_AVDDH_PAD
BLUETOOTH USB 1.1 POWER SUPPLY. 3.3 V POWER INPUT. IT CAN BE EITHER NC OR CONNECT TO 3.3 V IF USB1.1 IS NOT USED.

REVISIONS

REV	ZONE		DESCRIPTION	E.C.	BY	APVD.	DATE
			SEE SHEET 1				

ZEBRA TECHNOLOGIES CORP.
HOLTSVILLE, NEW YORK 11742

QUASAR MAIN BOARD
WCN6856 POWER

SIZE D | DWG. NO. TBD | REV V18

Fri Nov 17 17:41:12 2023 | SHEET 53 OF 61

WCN6856_IO

REV	ZONE		DESCRIPTION	E.C.	BY	APVD.	DATE
			SEE SHEET 1				

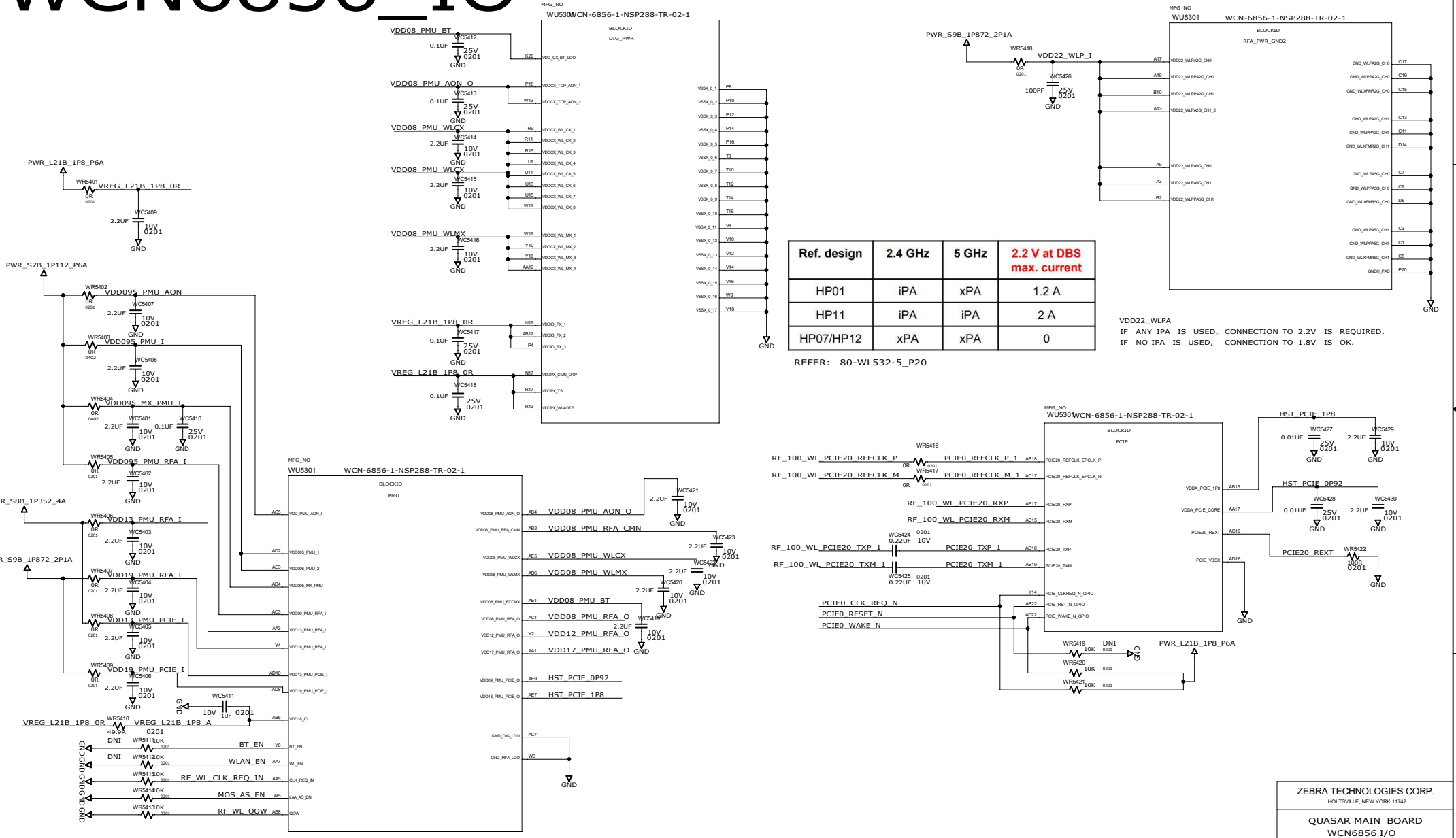

Ref. design	2.4 GHz	5 GHz	2.2 V at DBS max. current
HP01	iPA	xPA	1.2 A
HP11	iPA	iPA	2 A
HP07/HP12	xPA	xPA	0

REFER: 80-WL532-5_P20

VDD22_WLPA
IF ANY IPA IS USED, CONNECTION TO 2.2V IS REQUIRED.
IF NO IPA IS USED, CONNECTION TO 1.8V IS OK.

LAA REQUEST TO SHARE XFEM INTERFACE THAT IS USED TO CONTROL WLAN IN ANTENNA SHARING APPLICATION.

ZEBRA TECHNOLOGIES CORP.
HOLTSVILLE, NEW YORK 11742

QUASAR MAIN BOARD
WCN6856 I/O

SIZE D | DWG. NO. TBD | REV V18

Fri Nov 17 17:41:14 2023 | SHEET 54 OF 61

WCN6856_IO

REVISIONS							
REV	ZONE	ECN	DESCRIPTION	E.C.	BY	APVD.	DATE
			SEE SHEET 1				

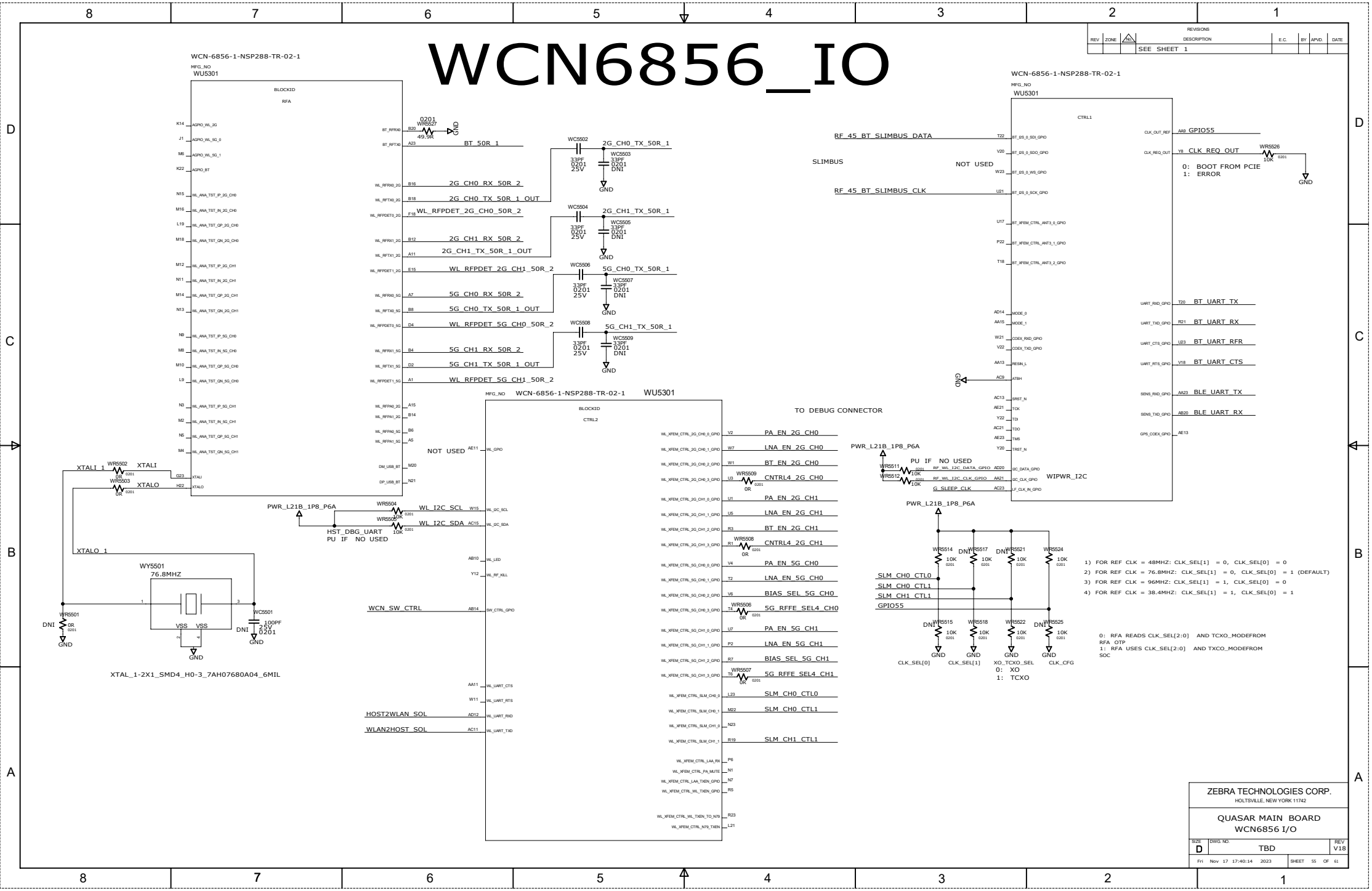

ZEBRA TECHNOLOGIES CORP. HOLTSVILLE, NEW YORK 11742	
QUASAR MAIN BOARD WCN6856 I/O	
SIZE D	DWG. NO. TBD	REV V18
Fri Nov 17 17:40:14 2023	SHEET 55 OF 61

REVISIONS							
REV	ZONE	ECN	DESCRIPTION	E.C.	BY	APVD.	DATE
			SEE SHEET 1				

WIFI 2G/5G ANTENNA

WIFI_CH1

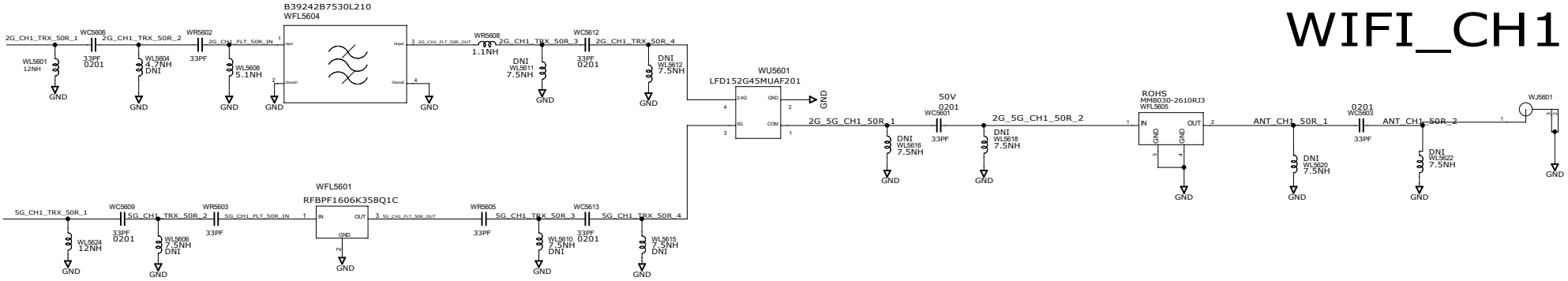

IF NO OTHER DC PATH FROM ANT PORT TO GROUND IS AVAILABLE, THEN SHUNT INDUCTOR TO GROUND AT ANT PORT IS MANDATORY.

WIFI_CH0

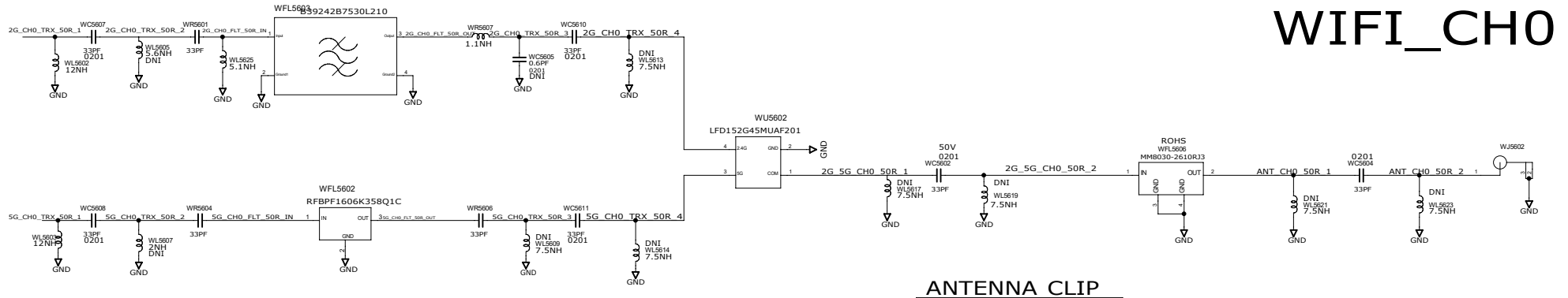

IF NO OTHER DC PATH FROM ANT PORT TO GROUND IS AVAILABLE, THEN SHUNT INDUCTOR TO GROUND AT ANT PORT IS MANDATORY.

ANTENNA CLIP

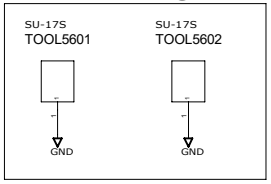

ZEBRA TECHNOLOGIES CORP.
HOLTSVILLE, NEW YORK 11742

QUASAR MAIN BOARD
WIFI 2G/5G ANTENNA

SIZE	DWG. NO.	REV
D	TBD	V18

Fri Nov 17 17:41:15 2023 SHEET 56 OF 61

2.4GHZ CHAIN 0/1 XFEM

REVISIONS							
REV	ZONE	ECN	DESCRIPTION	E.C.	BY	APVD.	DATE
			SEE SHEET 1				

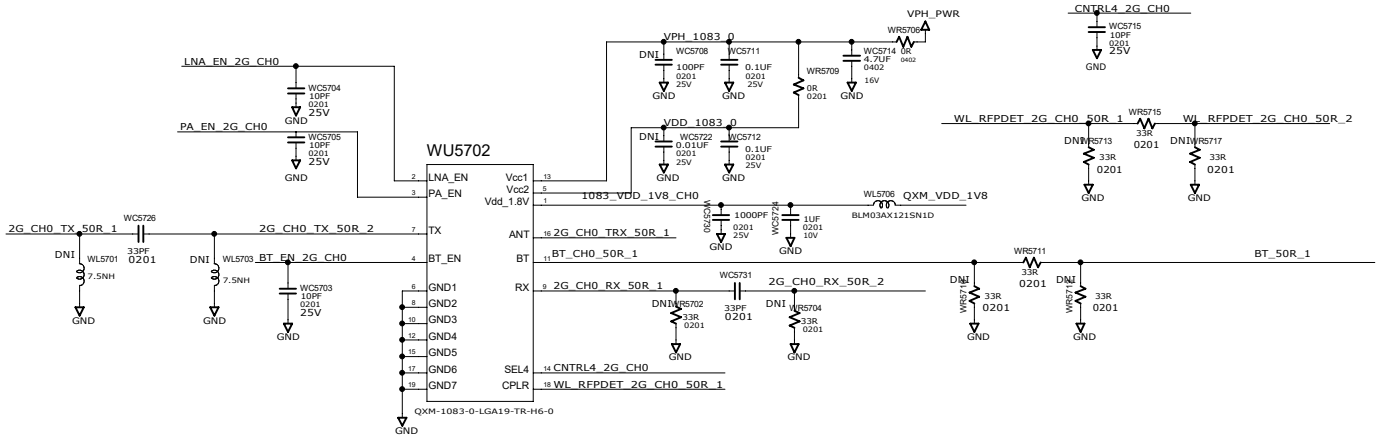

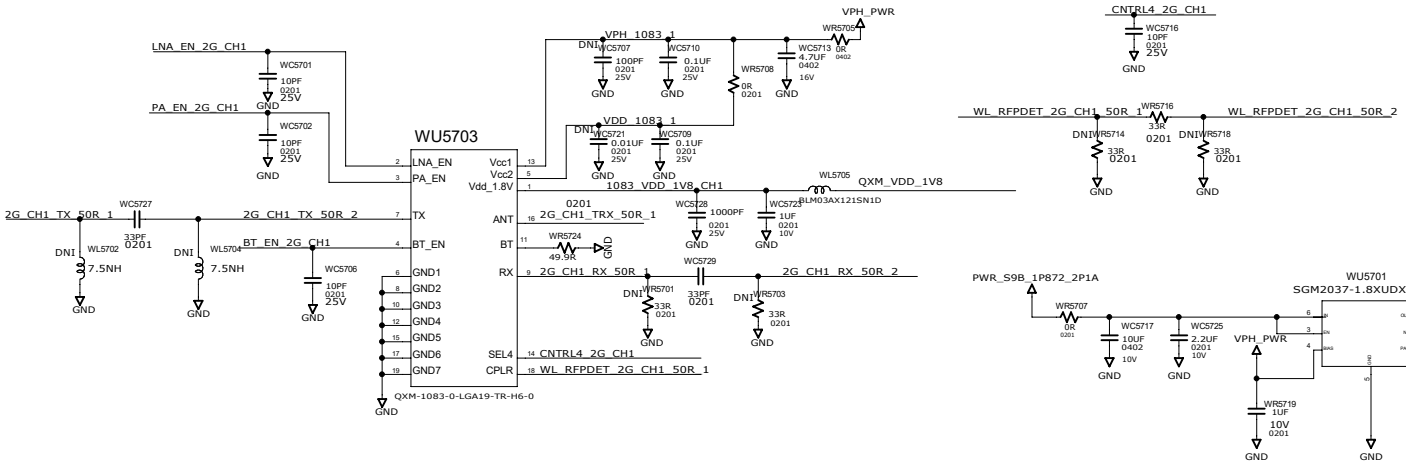

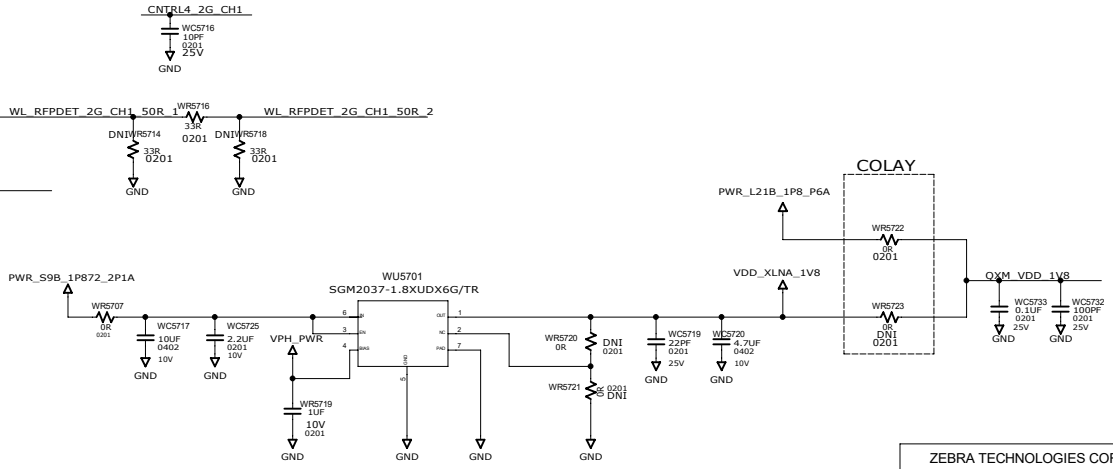

ZEBRA TECHNOLOGIES CORP.
HOLTSVILLE, NEW YORK 11742

QUASAR MAIN BOARD
2.4GHZ CHAIN 0/1 XFEM

SIZE	DWG. NO.	REV
D	TBD	V18

Fri Nov 17 17:40:30 2023 SHEET 57 OF 61

REV	ZONE		DESCRIPTION	E.C.	BY	APVD.	DATE
			SEE SHEET 1				

5G-7GHZ CHAIN 0/1 XFEM

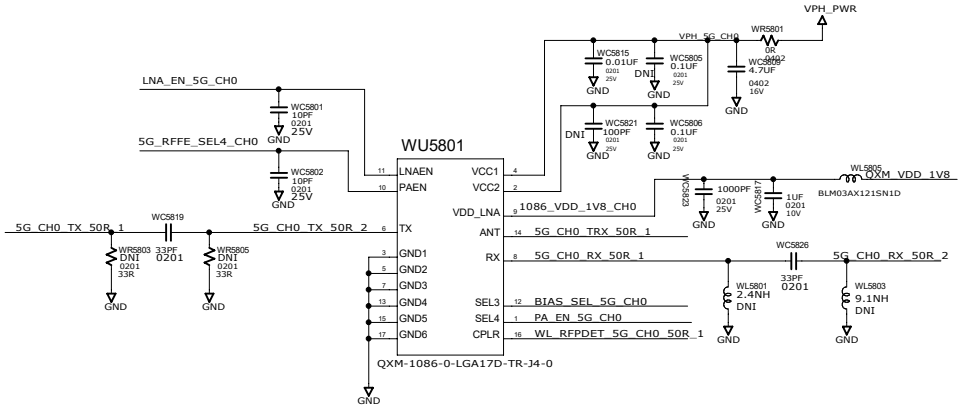

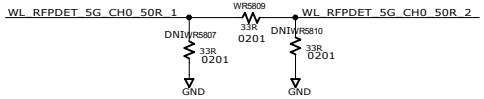

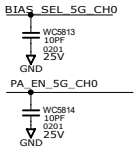

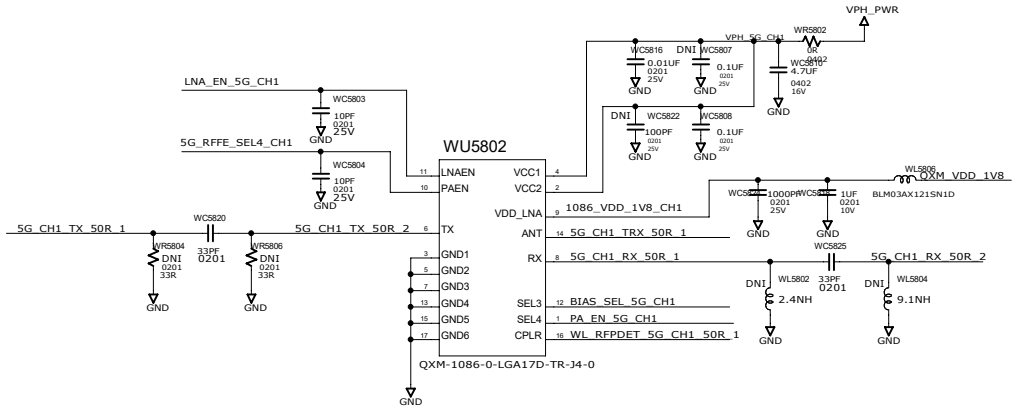

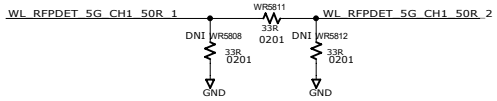

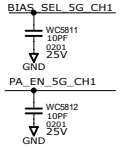

ZEBRA TECHNOLOGIES CORP.
HOLTSVILLE, NEW YORK 11742

QUASAR MAIN BOARD
5G-7GHZ CHAIN 0/1 XFEM

SIZE	DWG. NO.	REV
D	TBD	V18

Fri Nov 17 17:41:17 2023 SHEET 58 OF 61

REVISIONS							
REV	ZONE	ECN	DESCRIPTION	E.C.	BY	APVD.	DATE
			SEE SHEET 1				

RESERVE PAGE

ZEBRA TECHNOLOGIES CORP.
HOLTSVILLE, NEW YORK 11742

QUASAR MAIN BOARD
RESERVE PAGE

SIZE	DWG. NO.	REV
D	TBD	V18

Mon Aug 28 15:47:37 2023 SHEET 59 OF 61

REVISIONS							
REV	ZONE	NO.	DESCRIPTION	E.C.	BY	APVD.	DATE
			SEE SHEET 1				

RESERVE PAGE

ZEBRA TECHNOLOGIES CORP.
HOLTSVILLE, NEW YORK 11742

QUASAR MAIN BOARD
RESERVE PAGE

SIZE	DWG. NO.	REV
D	TBD	V18

Mon Aug 28 15:47:38 2023 SHEET 60 OF 61

HISTORY

REVISIONS							
REV	ZONE	NO.	DESCRIPTION	E.C.	BY	APVD.	DATE
			SEE SHEET 1				

ZEBRA CONFIDENTIAL

ZEBRA TECHNOLOGIES CORP.
HOLTSVILLE, NEW YORK 11742

QUASAR MAIN BOARD
HISTORY

SIZE	DWG. NO.	REV
D	TBD	V18

Tue Aug 08 19:10:31 2023 SHEET 61 OF 61