REV	RESPONSIBLE	REVISION RECORD
A	CMAY	RELEASE

100mm

BLACK = PANTONE COOL GREY 9

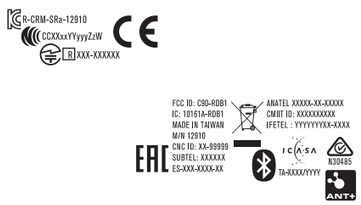

08MAY18 66-7518-166-010

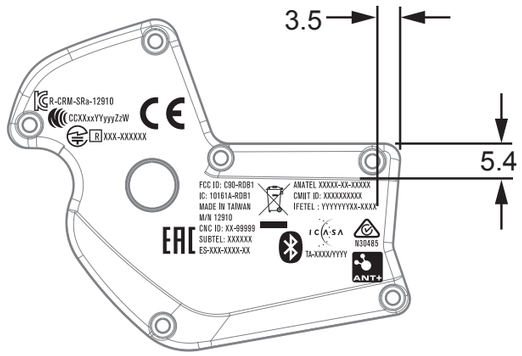

NOT TO SCALE

PART NUMBER	DESCRIPTION
66-7518-166-010	ARTWORK DOPPIO FORCE CERTFICATION RD PK

Notes:

Certification Font Specifications
- NAME: Berthold Akzidenz Grotesk
- STYLE: Condense
- WEIGH : Regular

DOCUMENT MAY NOT REPRESENT COMPLETE REQUIREMENTS. REFER TO PRODUCT STRUCTURE

GEOMETRIC DIMENSIONING AND TOLERANCING TO BE INTERPRETED PER ASME Y 14.5-2009

DO NOT SCALE DRAWING

ALL DIMENSIONS ARE mm

UNSPECIFIED LENGTH TOLERANCE X.X +/- 0.5

UNSPECIFIED ANGLE TOLERANCE +/- 2degrees

FORMAT: A3 | SHEET: 1/1

SRAM®

CONFIDENTIAL - THIS DRAWING CONTAINS INFORMATION THAT IS PROPRIETARY TO SRAM CORPORATION AND MAY NOT BE DISCLOSED WITHOUT PERMISSION.

DRAWING NAME/DESCRIPTION: ARTWORK DOPPIO FORCE CERTFICATION RD PK

DRAWING NUMBER: 66-7518-166-0XX

REVISION: A