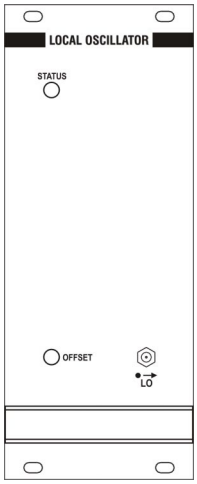

DESCRIPTION

The synthesis system of the local oscillator for the channel conversion is based on a control technique which allows to obtain the programming of the standard, the channel (split into the three bands I, III, IV/V) and the line offset (as multiple of the line frequency of the video signal) via software, with no change to be made.
The module includes an internal VCTCXO reference which can be locked to a more precise 5/10MHz reference (trough the bus) needed if the field offset is used.

TECHNICAL CHARACTERISTICS

Nominal level	+13dBm ±1dB
FM S/N ccir unweight.	> 65dB
FM S/N ccir wght.	> 60dB
Analog measures	VCO control voltage
Carrier frequency synthesis	A PLL
Offset	Line offset, step ±1/12 line frequency
O.L. carrier characteristics	On/Off selection and fine adjust
Frequency reference	Internal TCXO externally lockable
External interface	Microprocessor with RS485 protocol
Firmware	Re-configurable via RS485

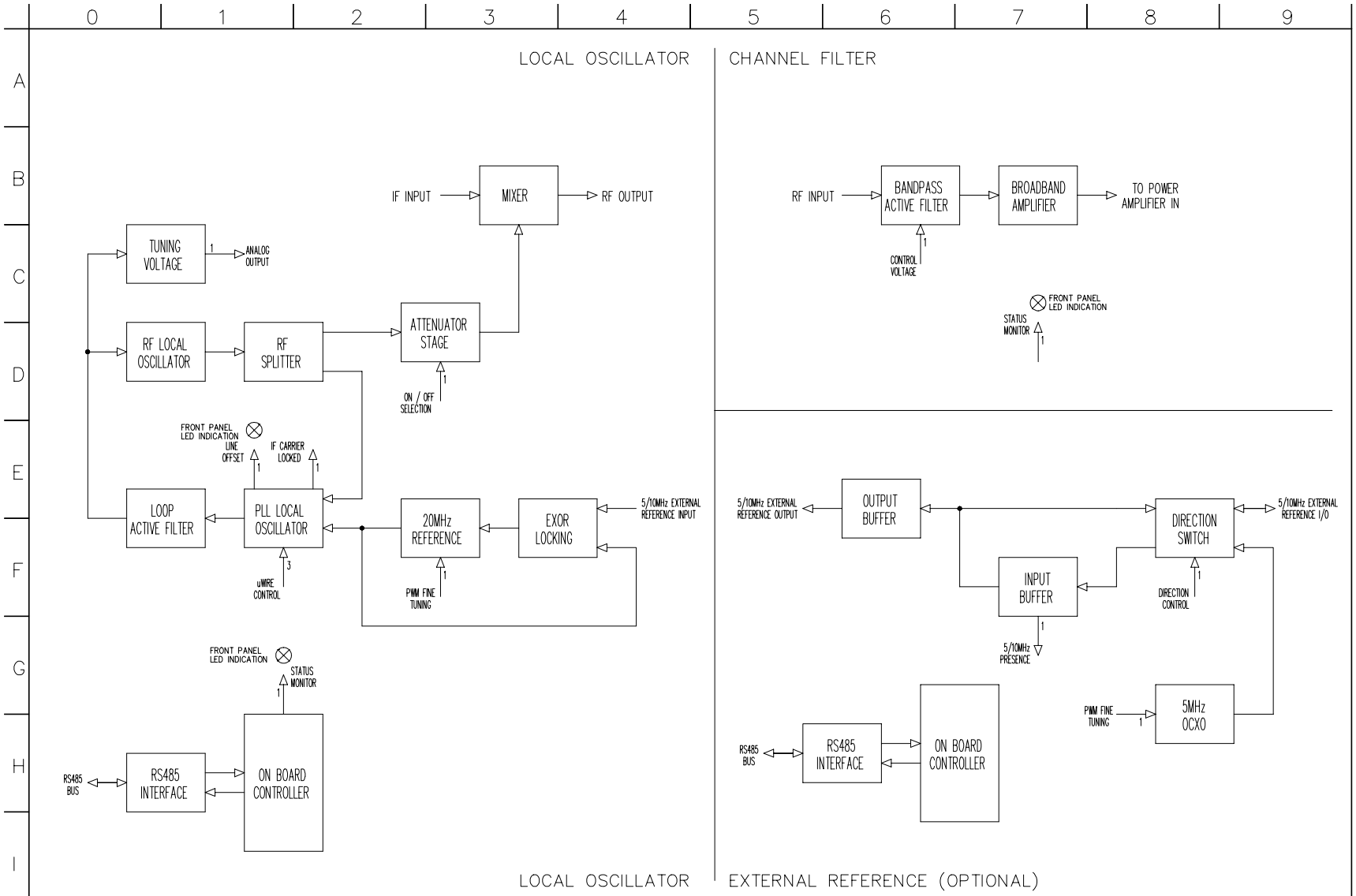

ELETTRONIKA s.r.l.	ELECTRIC DIAGRAM	DESIGNER MINERVINI	SIGNATURE	DATE 10/12/2004
ASSEMBLY CODE MTG0084A	TITLE MULTISTANDARD LOCAL OSCILLATOR	PCB DESIGNER TULLO	SIGNATURE	PCB REF PN1170A
				SHEET 1 OF 1

The module contains the following blocks:

1. **Local oscillator** – generated the carrier to be synthesised, it is split into three windows (I-II / III / IV-V band) to ensure the coverage of all of the TV channels to be implemented for all standards.
2. **Radio-frequency splitter** – splits the signal coming from the local oscillator by means of splitters and amplifiers, with 10dB attenuation and gain respectively, to ensure the complete isolation of the LO from the other stages and to minimise the 'frequency pulling' phenomenon.
3. **PLL stage** – synthesises the desired channel by locking the LO to a 20MHz frequency reference by means of a PLL which can be configured via uWire and provides the locking and line-offset indication (LED on frontal panel); the choice is made via software.
4. **Active ring filter** – stabilises the system in PLL retro-action and e has to be modified if the operating band of the module changes (see table attached to the electrical diagram).
5. **Conditioning stage of the correction voltage** – conditions the correction voltage of the PLL ring providing a conditioned analog voltage for the A/D conversion; the voltage is processed by the microcontroller of the display board (see MTG0079) to be displayed as VU-METER.
6. **Mixer** – in the UPCONVERTER version of the module, converts to channel the intermediate frequency coming from the pre-corrector (see MTG0073) using a LEVEL13 mixer (in case the module is only used as LO, see REPEATER configuration, this stage is not present and the synthesised carrier goes directly to the output of the module).
7. **20MHz reference** – the frequency reference to the PLL synthesis of the carrier is generated by an internal TCXO which fine control of the frequency is internally generated via PWM by the microcontroller or, alternately, can be locked to a more precise 5/10MHz external reference (see MTG0076).
8. **Controller** – all of the described operations are managed by a microcontroller communicating to the user interface board (see MTG0079) by RS485 protocol; the local controller stores the status of the module and a reprogramming of the firmware (possible via RS485 from the display board) does not alter its contents.

CALIBRATION PROCEDURE

- List of instrument

MEASURE	INSTRUMENT
Lock of the carriers and reference	*- Spectrum analyser* *- Oscilloscope* *- Tester*

- Description of the adjustment points

COMPONENT	DESCRIPTION
C1, C2, C3	Tuning of the local oscillator (SCH0292 - 0309 - 0310)
J3	LO input
J5, J8	RF link (absent in case of LO configuration)
J4	LO monitor (panel)
JP1	Unused
J2	Testpoint for the debug of the PLL

The calibration procedure of the module requires a complete structure of display board (see MTG0079) and extension module (see MTG0095) in order to perform the software selection which will be referred to later and power the module itself..

- Menu of the Multistandard UHF Local Oscillator Module

Verification of the local oscillator section – connect a spectrum analyser to the monitor of the **J4** module and check the sections therein:

- ❑ Configure the module with ***Output*** *Enabled*, ***LineOffset*** *Zero*, ***Ref*** *Internal* and ***Channel*** on the desired channel, and calibrate **C1(C2** and **C3)** to lock the carrier to the LO frequency of the standard and channel set (to change the standard refer to the standard changing procedure) and obtain a locking voltage between *2V* and *3V* on **TP1**, checking that ***VCO*** is on *Lock* in the display menu.

Verification of the external reference section – connect a spectrum analyser to the monitor of the **J4** module and check the sections therein:

- ❑ Configure the module with ***Ref*** *Internal* and check that it is possible to find adjust the synthesised frequency by acting on Tune.

Component layout for adjustment points

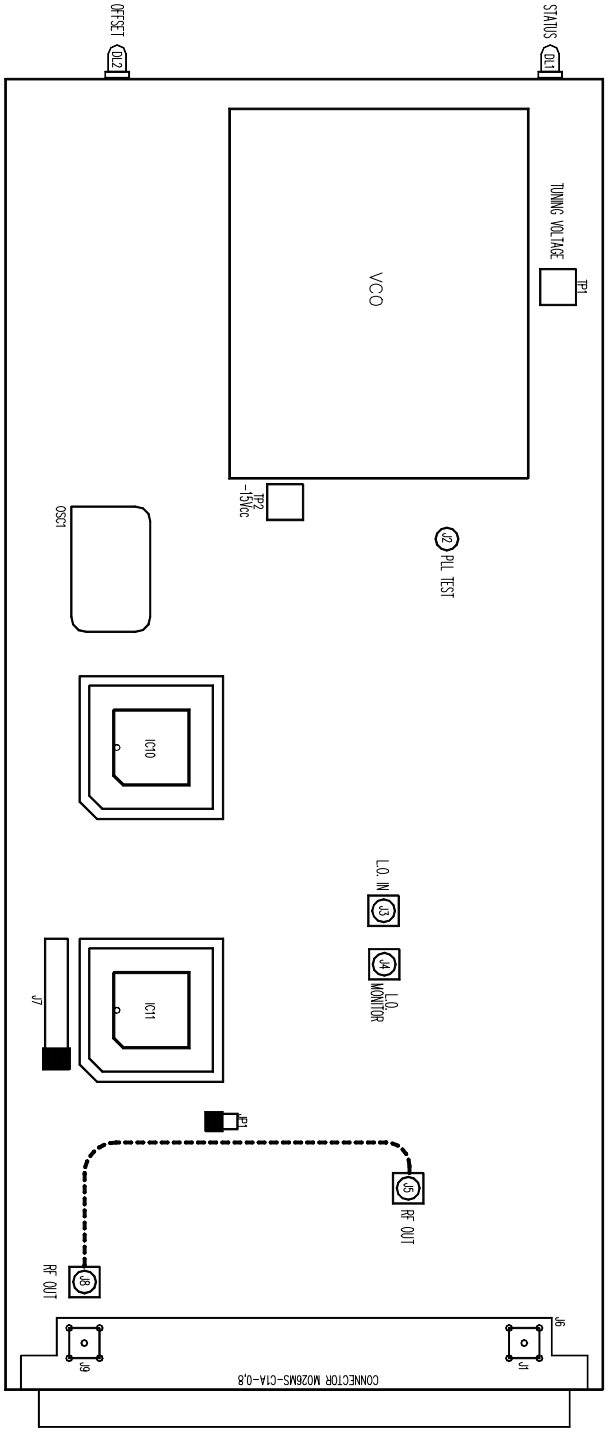

Component layout SCH0293AR0

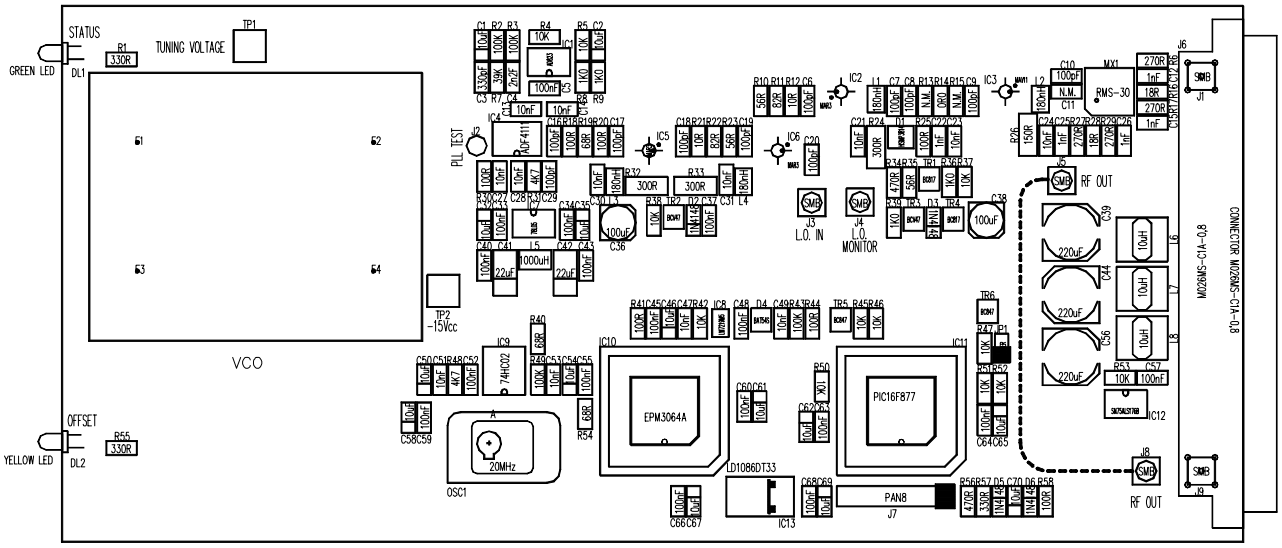

Component layout SCH0292AR0

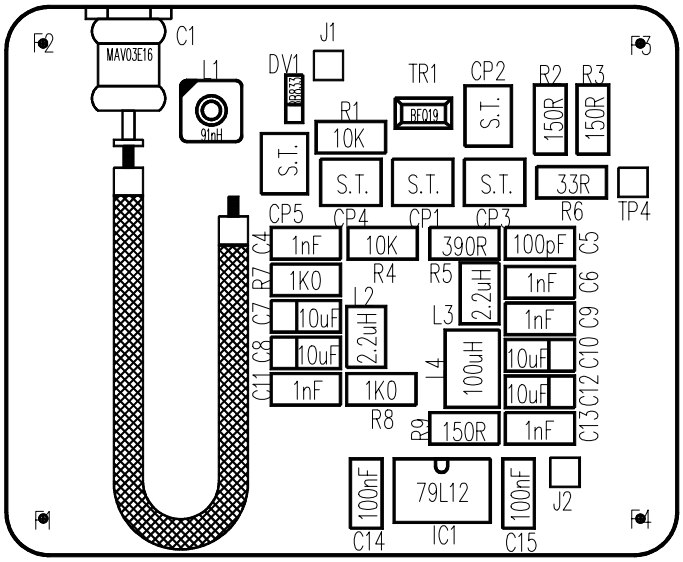

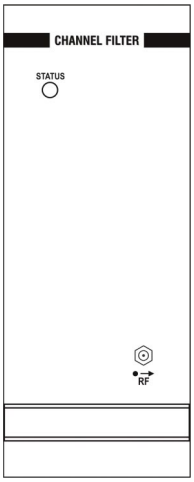

DESCRIPTION

The module filters the signal coming from the conversion mixer removing the local oscillator and the upper side-band and contains the voltage-controlled gain stage composed by a pin-diode attenuation cell followed by a wide-band amplification stage used as driver of the final stage.

TECHNICAL CHARACTERISTICS

Input/output impedance	50Ω R.O.S.>20dB
Filter type	Active 5-cell band-pass
RF-attenuation type	4 PIN-diodes cell
Output amplifier	Wide band
Overall gain	25dB (max.)

The module contains the following blocks:

1. **Active band-pass filter** – filters the lower side-band after conversion, it is split into three windows (I-II / III / IV-V band) to ensure the coverage of all of the TV channels to be implemented for all standards, and contains the PIN-diode attenuation cell for the gain control.

2. **Wide-band amplifier** – amplifies the filtered channel in order to obtain the correct driving level for the RF final stages (see MTF0088-0087-0089).

CALIBRATION PROCEDURE

- List of instruments

MEASURE	INSTRUMENT
Calibration of the channel filter	*- Network analyser* *- Spectrum analyser with tracking*

- Description of the adjustment points

COMPONENT	DESCRIPTION
C1-C8, C18-19	Channel filter calibration for bands III and IV-V
C17, C20-24, C26-27, C31-32	Channel filter calibration for band I-II
L1-6	Channel filter calibration for band I-II
J6	RF monitor (panel)
JP1, R29	Local gain control of the filter
J2	Channel filter input
J4	Channel filter output

The calibration procedure of the module requires a complete structure of display board (see MTG0079) and extension module (see MTG0095) in order to perform the software selection which will be referred to later and power the module itself.

- Menu of the Multistandard UHF Channel Filter Module

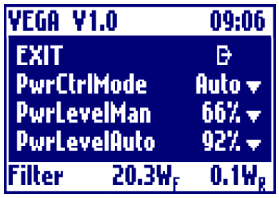

Verification of the channel filter – connect a network analyser to the channel filter and calibrate its components to obtain the desired frequency response:

- ❑ Configure the module with ***PwrCtrlMode*** *Man* and verify that it is possible to change the gain of the filter by acting on ***PwrLevelMan***, setting **JP1** *Remote*.

Verification of the wide-band amplifier section – connect a spectrum analyser with tracking between **J4** and **J5** check that the frequency response of the amplifier is flat within *1dB* from *50MHz* to *900MHz*.

Component layout for adjustment points

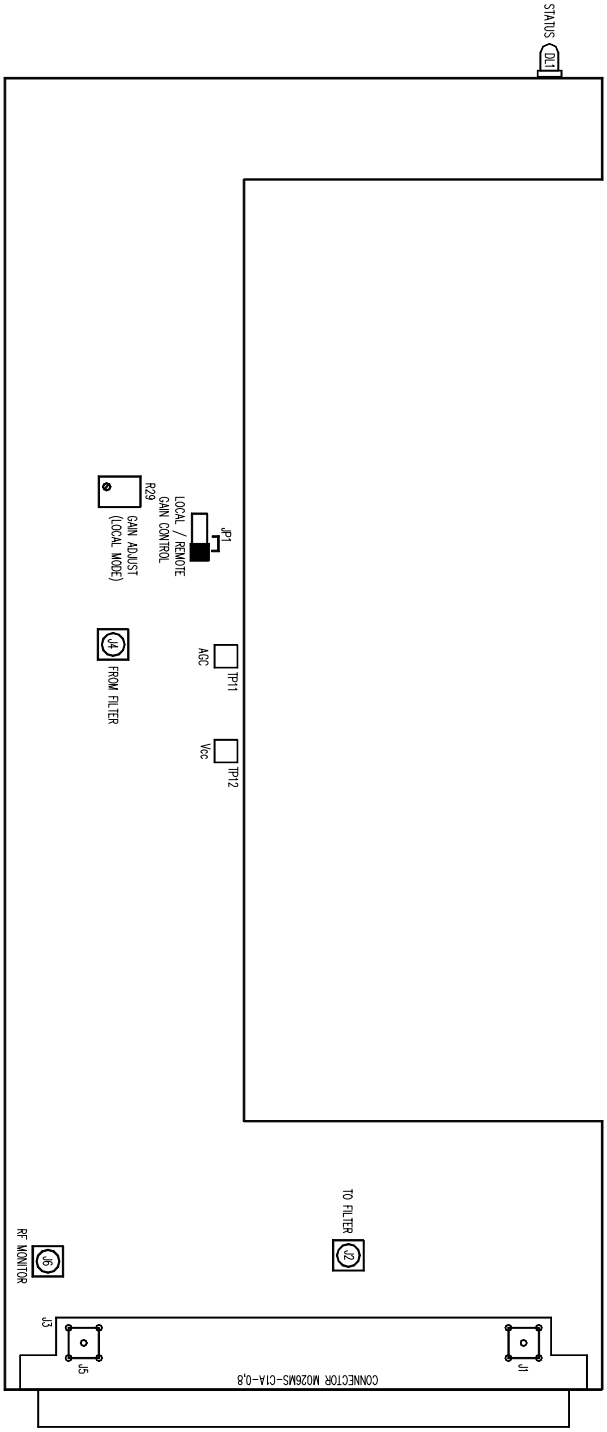

Component layout SCH0222AR2

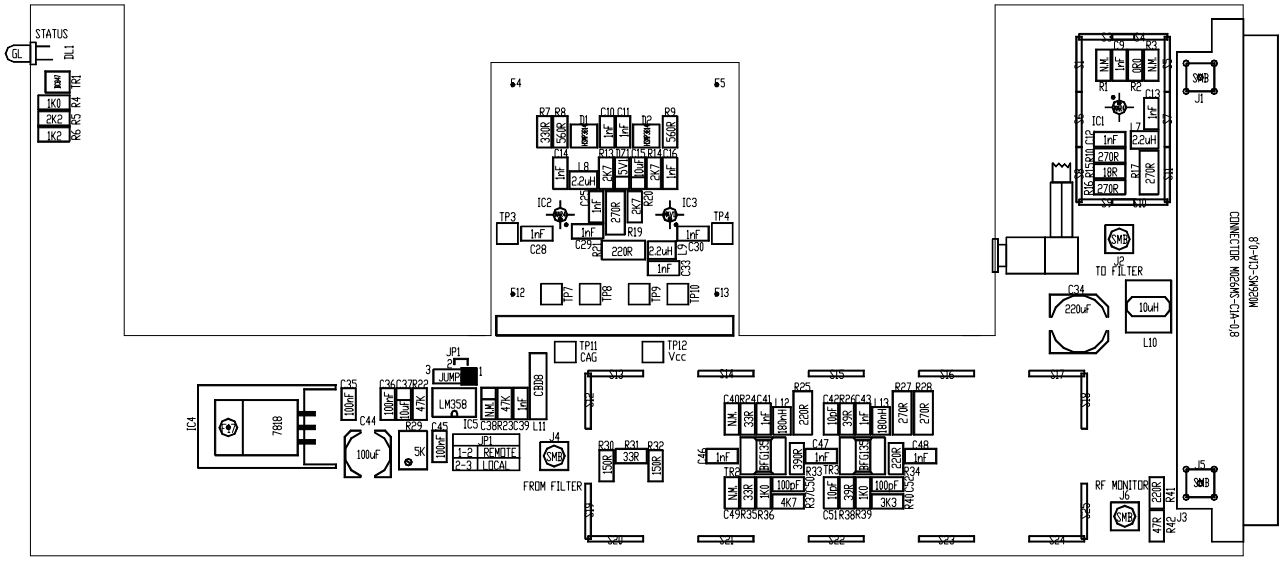

Component layout UHF Channel Filter

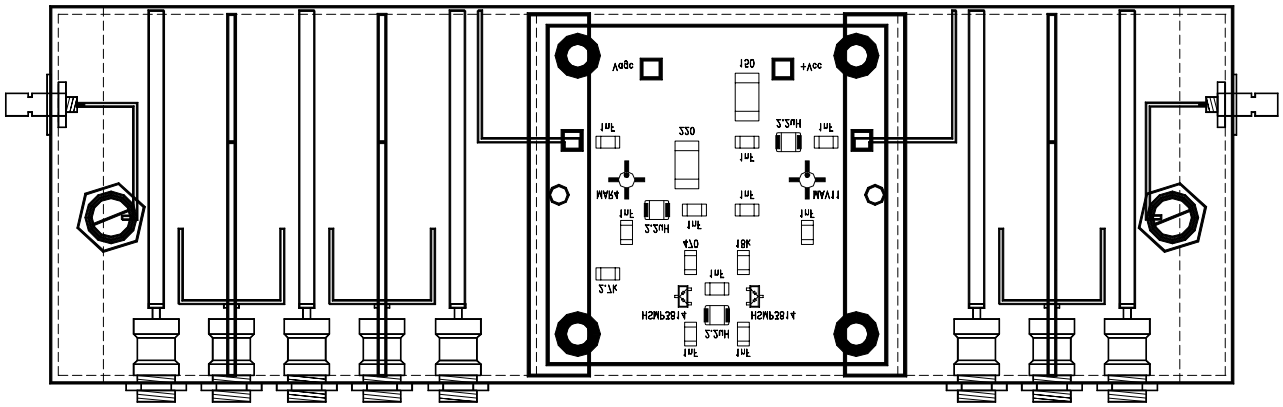
+Vcc
Q1
+9V
C22
1nF
C20
1nF
HUS.S
1nF
1nF
1nF

SCH0135AR1 DESCRIPTION

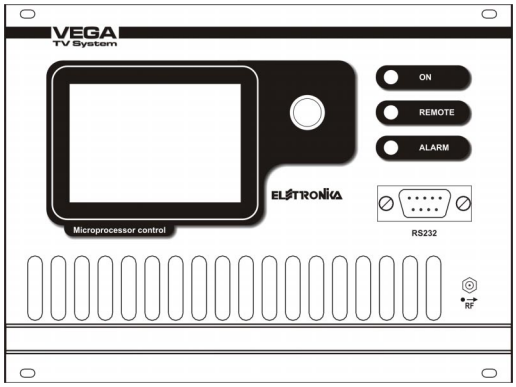

The Controller module, located on the right side of the VEGA TV modulator, is the user interface of the whole modulator. It gathers the data from all the sections of the modulator, processes them by means of a 16bit flash micro-controller by Fujitsu and makes them available to the user both through the local interface, composed by a display and a knob, and the remote interface made up by the serial port (either the RS232 on the front or the RS485 on the back, as selected) or the interface of the telemeasuring connector.
The acquisition and setting of all the concerned parameters is made in two different ways. Analog measures reach the board from the individual modules as voltages, are conditioned on the board and then converted by an internal A/D converter in the micro.
The remaining parameters are gathered through a 2-wire RS485 interface, which runs on the bus. The display board acts as master on this 485 bus. Besides it is provided with an RTC and a non-volatile memory on an internal I2C bus.

- Dip-Switch

The display board is provided with 4 dip-switches. The dip-switches 3 and 4 are used to program the flash memory of the flash micro-controller by Fujitsu, in detail:

DIP3: On DIP4: Off Boot Programming
DIP3: Off DIP4: On Run or Firmware Programming

The "Boot Programming" configuration is only for BIOS programming purposes.
Once the BIOS has been programmed, the firmware has to be programmed at least once in order to use the board. The firmware programming and the normal operation of the board are obtained with the same position of the dip switches.
For more detail on Firmware upgrade please refer to the "Firmware Upgrade" section.

DIP2: On Factory setting
DIP2 is set to ON only during the factory setup of the exciter. This allow to store in the memory all of the settings made as 'factory defaults'.

Once the test is completed, and while the modulator is used normally, the DIP2 must be kept OFF.

- LEDs

The board is provided with three LEDs.

- On (green): it is lit when the exciter is switched on by local or remote control. The LED is blinking till the power reach his nominal value.

- Remote (yellow): it is lit when the exciter has been set to accept remote commands. To have it accept local commands again, the local/remote selection menu can be used.

- Alarm (red): shows that an alarm is present.
In case of alarm the red LED lights up and the icon of a bell appears in the upper bar of the display. If the alarm disappears, the red LED is turned off and the bell starts blinking, in order to show that an anomaly occurred. To know the details of the anomaly and when it occurred, the history menu can be used. Once this menu is accessed, the blinking bell icon disappears.
While an alarm is present the exciter switch off the output power. When the alarm disappear, the power is switched on again. After 5 times the exciter switch off the output power, the exciter goes in LockOut state: the power remains off till the user reset the LockOut. If the fails are far more that 1 hour than the LockOut counter is automatically cleaned.

TECHNICAL CHARACTERISTICS

Flash ROM	256kByte
RAM	6kByte
EEPROM	64kBit
Serial interfaces	2xRS485 or 1xRS485 + 1xRS232
Graphic display	128x64pixel blue with white LED back light
Encoder	Mechanical with push button
Clock and Calendar	Lithium battery backup
Telemeasures	Output: FWD, REF, Alarm
	Input: Remote OFF

FIRMWARE UPGRADE

Inside the VEGA exciter there are 5 micro-controllers. One of these is the one of the display board (16bit Fujitsu with 256K Flash) while 4 are in the audio, video, local oscillator and external reference boards respectively (8bit Microchip with 8K Flash).
It is possible to upgrade all of the micro-controllers of the exciter, but the procedures differ from the display one and the remaining four.
All upgrades are made by means of the RS232 connector on the front panel of the exciter.
All of the firmware inside the exciter are made up by two parts: the BIOS and the firmware proper. The former only programs the built-in Flash memory, while all of the operations of the micro are determined by the

latter.

- ***Upgrade of the BIOS of the display board:***

While the exciter is off, set the dip-switched of the board on these positions DIP3:ON DIP4:OFF. Run the Fujitsu Flash MCU programmer application, select the BIOS file to be used, select download and follow the instructions given by the application.

- ***Upgrade of the FIRMWARE of the display board:***

A display board provided with the BIOS is needed.
While the exciter is off, set the dip-switched of the board on these positions DIP3:OFF DIP4:ON. Run the Vega Flash Application, select the upgrade of the display board and the file to be used, select download and switch the exciter on. The upgrade will start automatically.

- ***Upgrade of the boards on the BUS:***

A working display board is needed in order to upgrade the boards on the BUS, because the programming of the modules is made trough the display board.

Warning: while it is possible to program both the BIOS and the firmware of the display board, it is only possible to change the firmware, and not the BIOS, of the boards on the bus. Since the BIOS is in the same micro as the firmware, this means that it is not possible to program the micro of a board on the bus on a virgin micro, which can be done, instead, on the display.
To proceed with the upgrade, while the exciter is on and remote, run the Vega Flash Application, select the board to be upgraded and the file to be sent, then select download. The upgrade will start automatically.

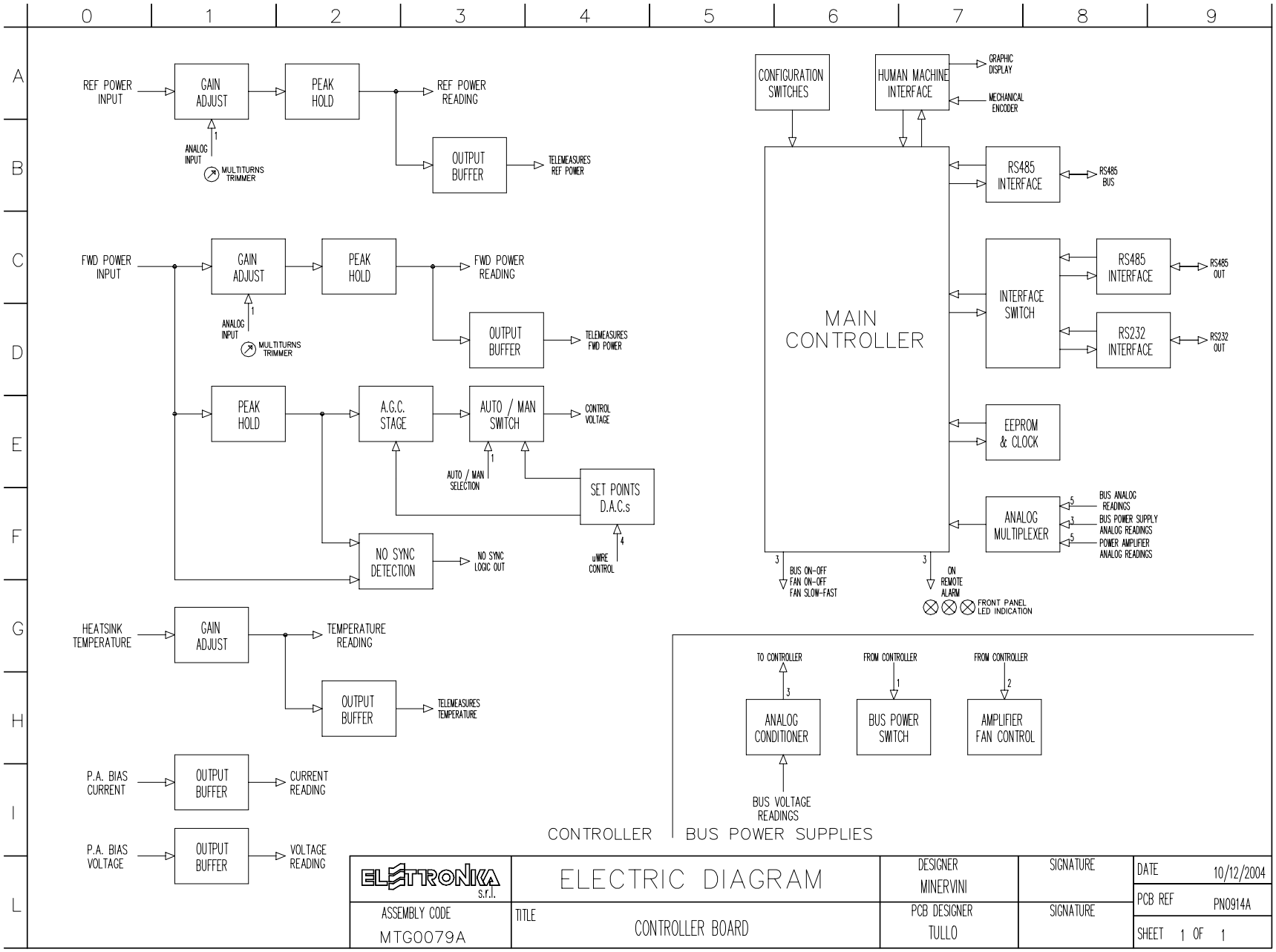
REF POWER INPUT
GAIN ADJUST
PEAK HOLD
REF POWER READING
ANALOG INPUT
MULTITURNS TRIMMER
OUTPUT BUFFER
TELEMEASURES REF POWER
FWD POWER INPUT
GAIN ADJUST
PEAK HOLD
FWD POWER READING
ANALOG INPUT
MULTITURNS TRIMMER
OUTPUT BUFFER
TELEMEASURES FWD POWER
PEAK HOLD
A.G.C. STAGE
AUTO / MAN SWITCH
CONTROL VOLTAGE
AUTO / MAN SELECTION
SET POINTS D.A.C.s
NO SYNC DETECTION
NO SYNC LOGIC OUT
uWPE CONTROL
HEATSINK TEMPERATURE
GAIN ADJUST
TEMPERATURE READING
OUTPUT BUFFER
TELEMEASURES TEMPERATURE
P.A. BIAS CURRENT
OUTPUT BUFFER
CURRENT READING
P.A. BIAS VOLTAGE
OUTPUT BUFFER
VOLTAGE READING
CONFIGURATION SWITCHES
HUMAN MACHINE INTERFACE
GRAPHIC DISPLAY
MECHANICAL ENCODER
MAIN CONTROLLER
RS485 INTERFACE
RS485 BUS
INTERFACE SWITCH
RS485 INTERFACE
RS485 OUT
RS232 INTERFACE
RS232 OUT
EEPROM & CLOCK
ANALOG MULTIPLEXER
BUS ANALOG READINGS
BUS POWER SUPPLY ANALOG READINGS
POWER AMPLIFIER ANALOG READINGS
BUS ON-OFF
FAN ON-OFF
FAN SLOW-FAST
ON REMOTE ALARM
FRONT PANEL LED INDICATION
TO CONTROLLER
FROM CONTROLLER
FROM CONTROLLER
ANALOG CONDITIONER
BUS POWER SWITCH
AMPLIFIER FAN CONTROL
BUS VOLTAGE READINGS
CONTROLLER
BUS POWER SUPPLIES
ELETTRONIKA s.r.l.
ELECTRIC DIAGRAM
DESIGNER MINERVINI
SIGNATURE
DATE 10/12/2004
PCB REF PN0914A
ASSEMBLY CODE MTG0079A
TITLE CONTROLLER BOARD
PCB DESIGNER TULLO
SIGNATURE
SHEET 1 OF 1

Component layout SCH0135AR1 - Bot layer

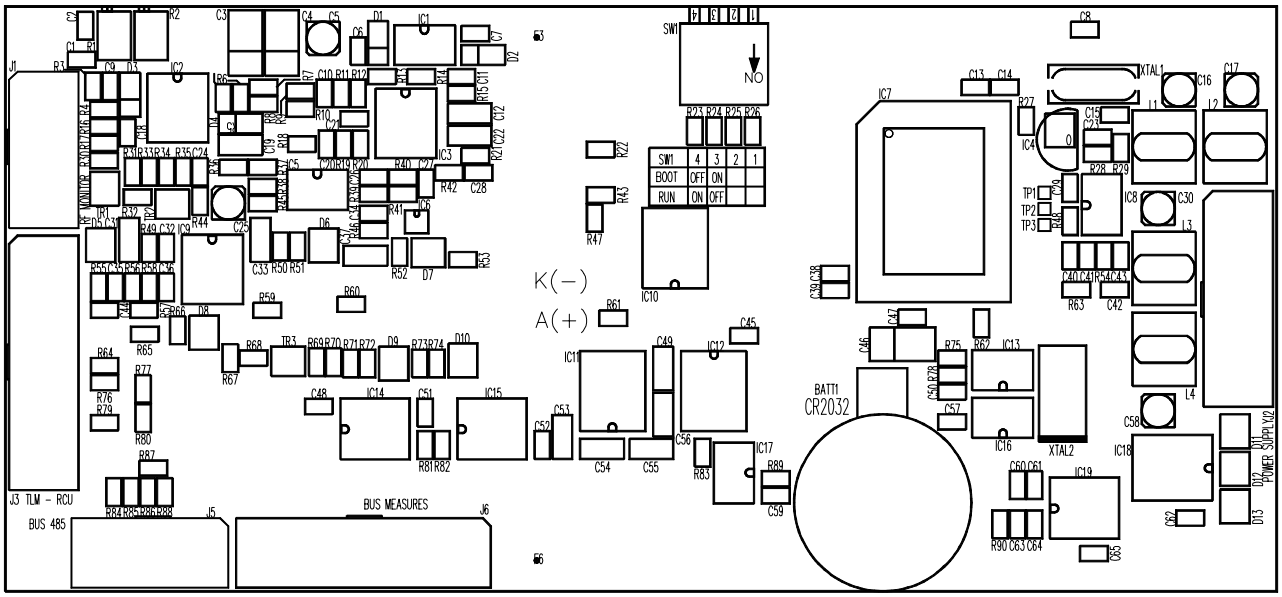

Component layout SCH0135AR1 - Top layer

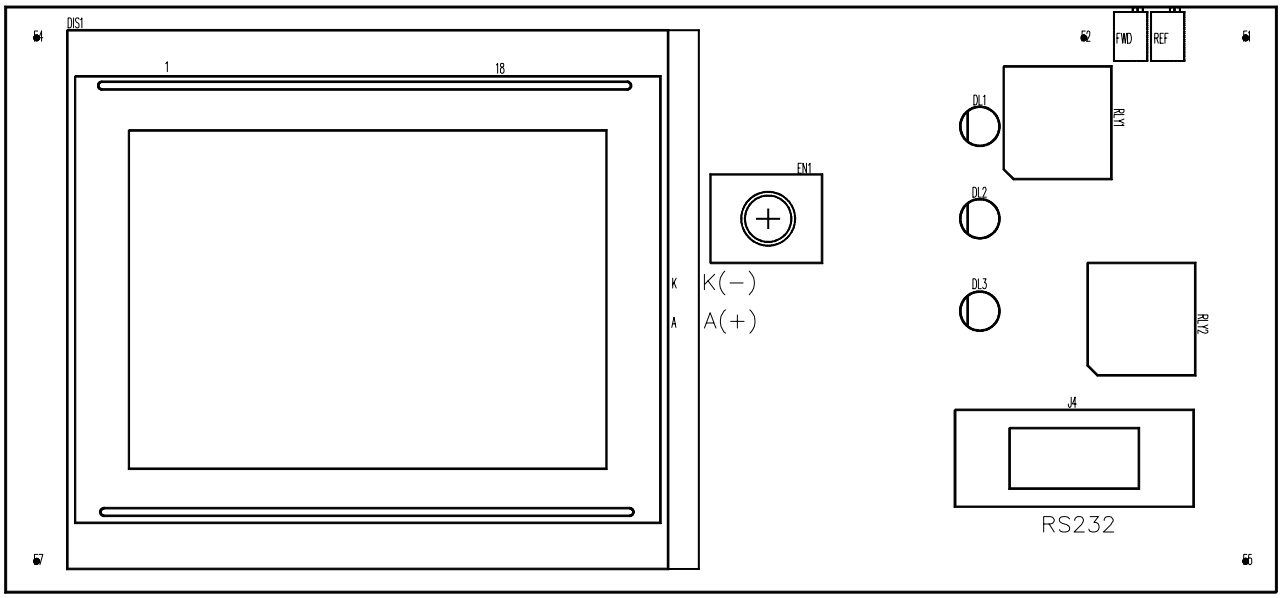

SCH0231AR1 DESCRIPTION

The power supply accepts a nominal continuous input voltage of 28V and supplies three continuous current output with voltages of +5V, +15V and -15V. It also provides a voltage of +28V to the system bus. The power supply voltages towards the system bus are switched by means of relays controlled by the micro-processor of the control board.
There are switching regulators for the +5V, +15V and -15V voltages.
The power supply board provides the operating voltages to the control board trough multi-wire flat cable. In this there are also analog voltages to monitor the power supply status. The monitoring of the +5V, +15V and -15V voltages are conditioned to about 4V nominal.
The board provides the power supply to the system fan. Its on/off status and its speed can be set by the micro-processor of the control board.
The connections to the system bus and power supply board are made using a fast-lock connector.

Component layout SCH0231AR1

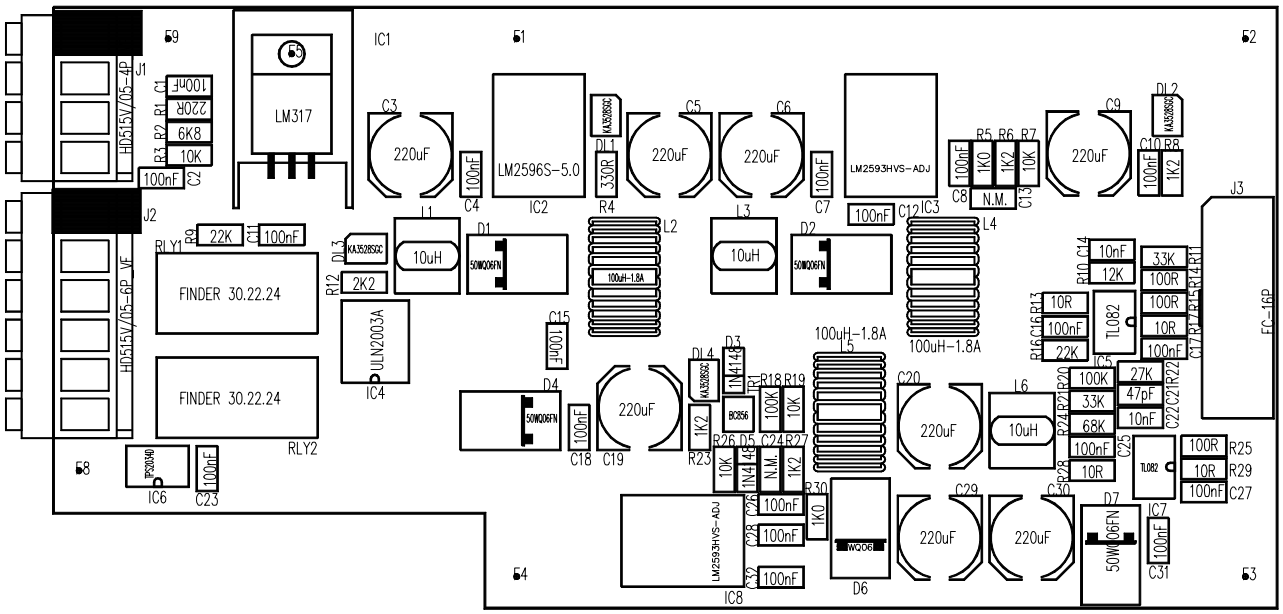

DESCRIPTION

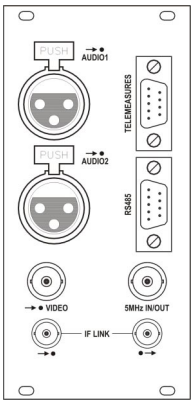

The board contains the 5/10MHz external reference and a series of functions on the back of the apparatus: the rear audio and video inputs, the telemeasuring connectors and the RS485, the external reference input (or output) and the IF connection before the linearity pre-corrector, in order to allow the insertion in the chain of different modulation systems such as NICAM.

TECHNICAL CHARACTERISTICS

Frequency reference	5-10MHz
Detector presence	0dBm threshold
Connector	BNC input-output selectable (sw)
O.C.X.O. Characteristics *(optional)*	0.05ppm long term stability
O.C.X.O. Tuning frequency	±5ppm fine tunability (sw)
O.C.X.O. Warm up consumption	4.5W 10min @25°C
IF Link	OPEN-CLOSED Selection switch (sw)
A-V Rear connections	Available on exciter arrangement
Telemasures	DB9
RS485-RS232	DB9 Selectable (sw)

Component layout SCH0266AR1

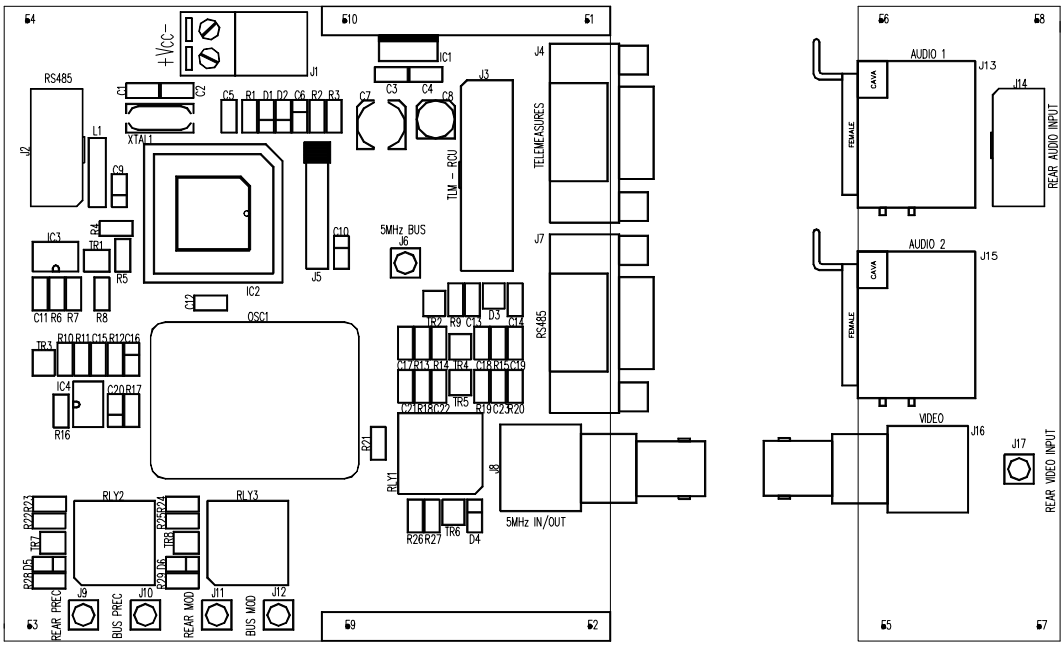

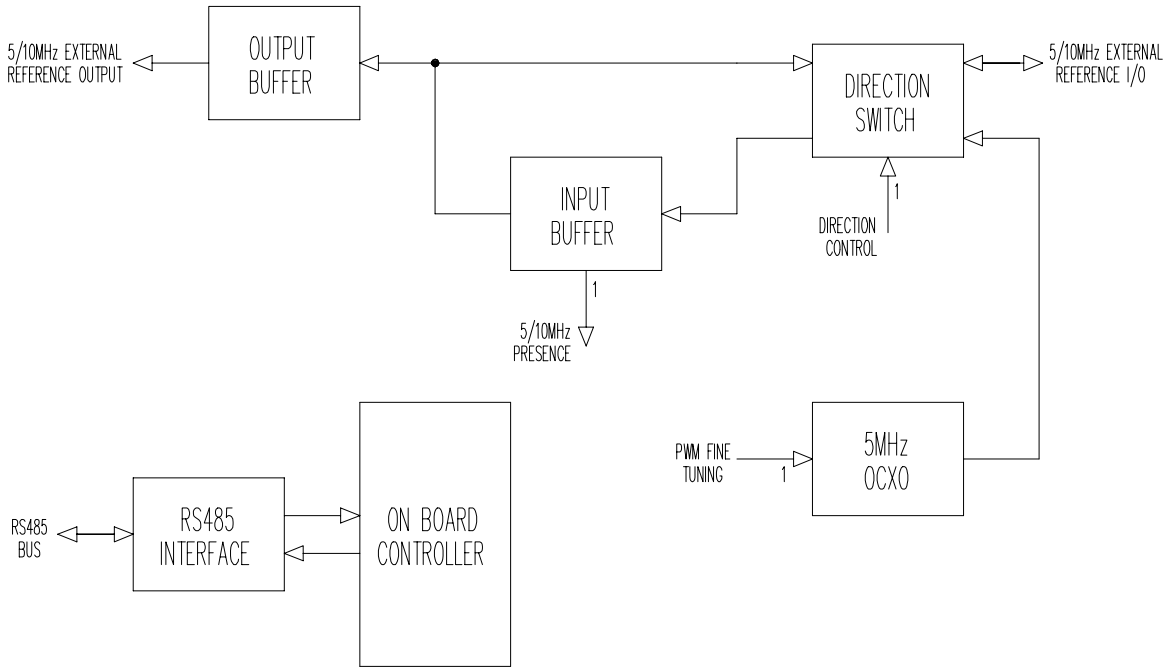

ELETTRONIKA s.r.l.	ELECTRIC DIAGRAM	DESIGNER MINERVINI	SIGNATURE	DATE 09/11/2004
ASSEMBLY CODE MTG0076A	TITLE EXTERNAL REFEREMENT MODULE	PCB DESIGNER TULLO	SIGNATURE	PCB REF PN1112AR2
				SHEET 1 OF 1

The module contains the following blocks:

1. **Input and output buffers** – de-couple the internal circuitry from the I/O conenctors and detect the presence of the reference signal.
2. **Direction switch** – allows the configuration of the BNC as either input or output for the 5/10MHz reference signal.
3. **5MHz O.C.X.O.**– 5MHz internal reference system *(optional)*, which frequency can be fine-adjusted via software.
4. **Controller** – all of the described operations are managed by a microcontroller communicating to the user interface board (see MTG0079) by RS485 protocol; the local controller stores the status of the module and a reprogramming of the firmware (possible via RS485 from the display board) does not after its contents.

EXTERNAL PIN OUT CONNECTORS

Telemeasures (DB9)

PIN N°	SIGNAL TYPE	IN / OUT	FUNCTION
1	Analog	Output	FWD Power
2	Analog	Output	REF Power
3	Analog	Output	Temperature
4	Analog	Input	FWD Power
5	GND	-	-
6	Digital	Output	Free contact with pin7 - Alarm
7	Digital	Output	Free contact with pin6 - Alarm
8	Digital	Input	GND= Off - OPEN= On
9	Digital	Input	N.U.

RS485 (DB9)

PIN N°	FUNCTION
1	N.C.
2	RX-
3	RX+
4	+5V
5	GND
6	+5V
7	TX-
8	TX+
9	N.C.

CALIBRATION PROCEDURE

- List of instrument

MEASURE	INSTRUMENT
Frequency referement control	*- Spectrum analyser*

The calibration procedure of the module requires a complete structure of display board (see MTG0079) in order to perform the software selection which will be referred to later and power the module itself..

- Menu of the External Referement Module

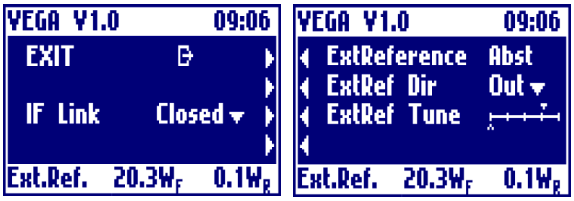

Verification of the external reference section – connect a spectrum analyser to the BNC labelled *EXT REF IN/OUT* and check the sections therein:

- ❑ Configure the module with ***ExtREF Dir Out*** and check the presence of the 5MHz carrier with ***ExtReference*** set to Pres in the display menu.
- ❑ Check that the 5MHz frequency is fine-adjusted by acting on ***ExtRef Tune***.

Verification of the IF Link section:

- ❑ Configure the module with ***IF Link*** open and closed checking the switching of the relays.

Component layout MTF0088BR0

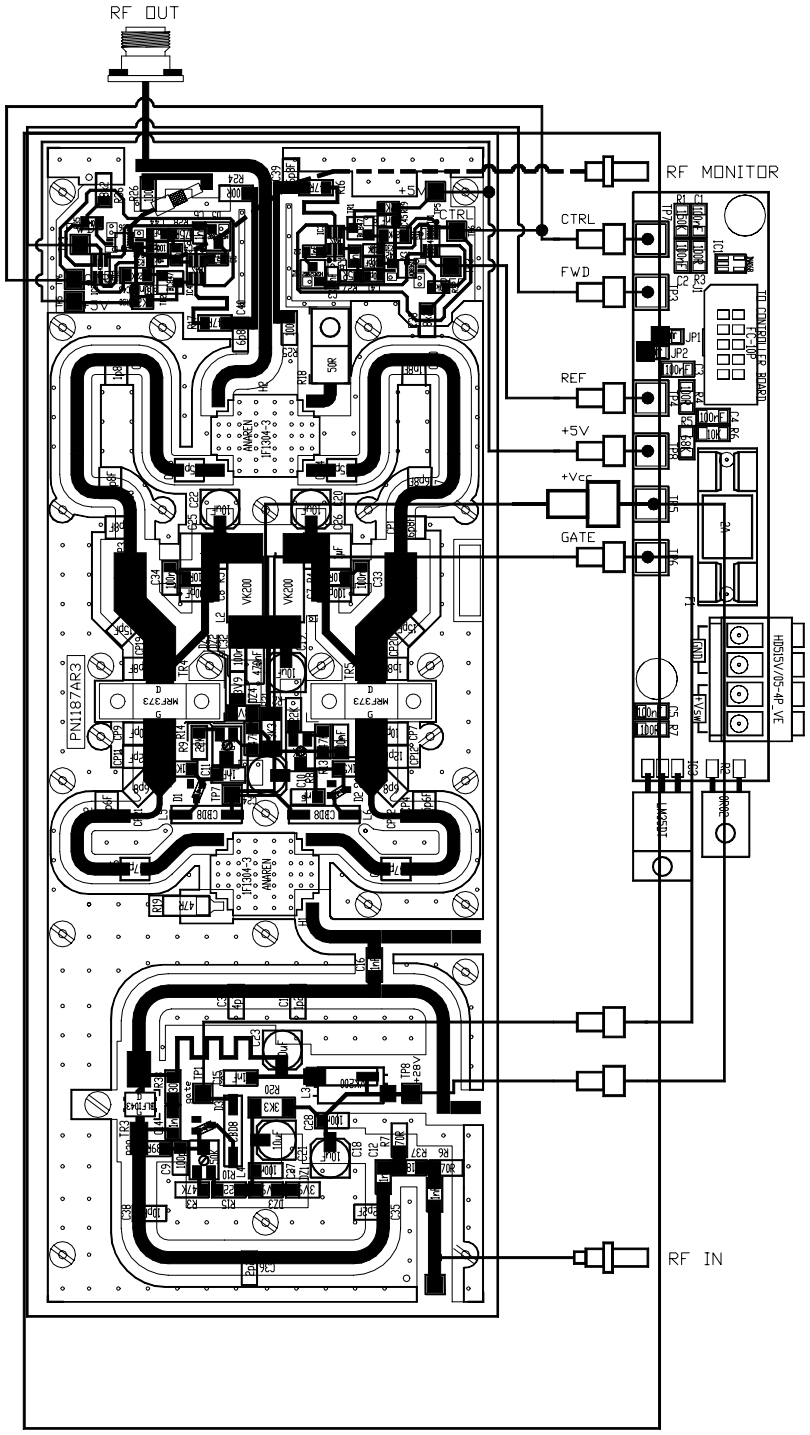

Component layout SCH0313BR0 - 15W UHF Amplifier Module

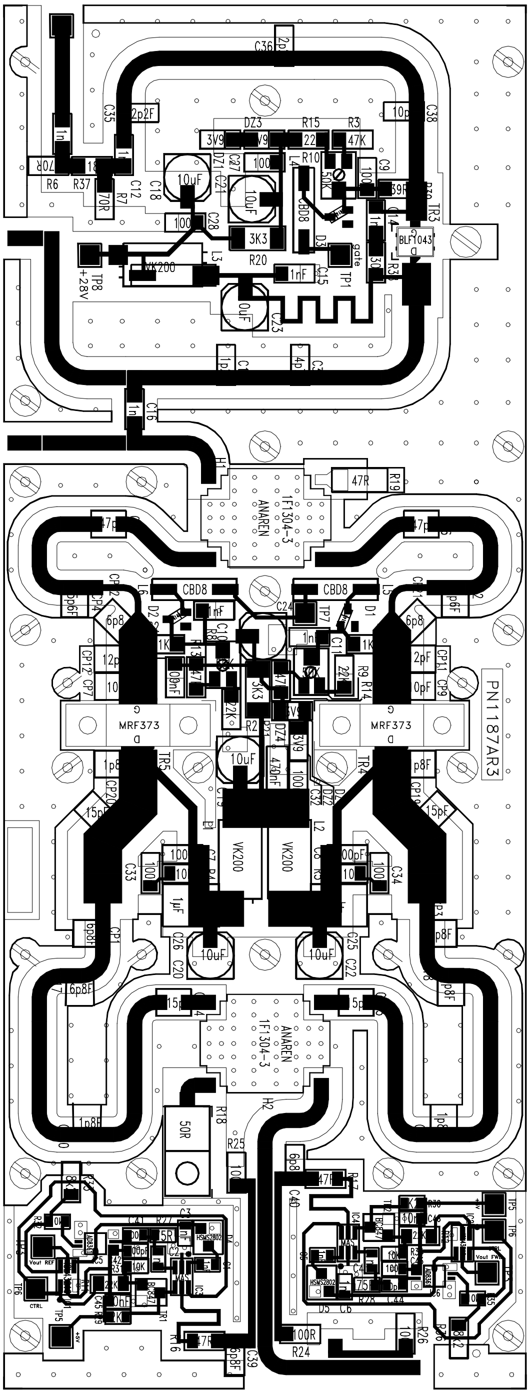

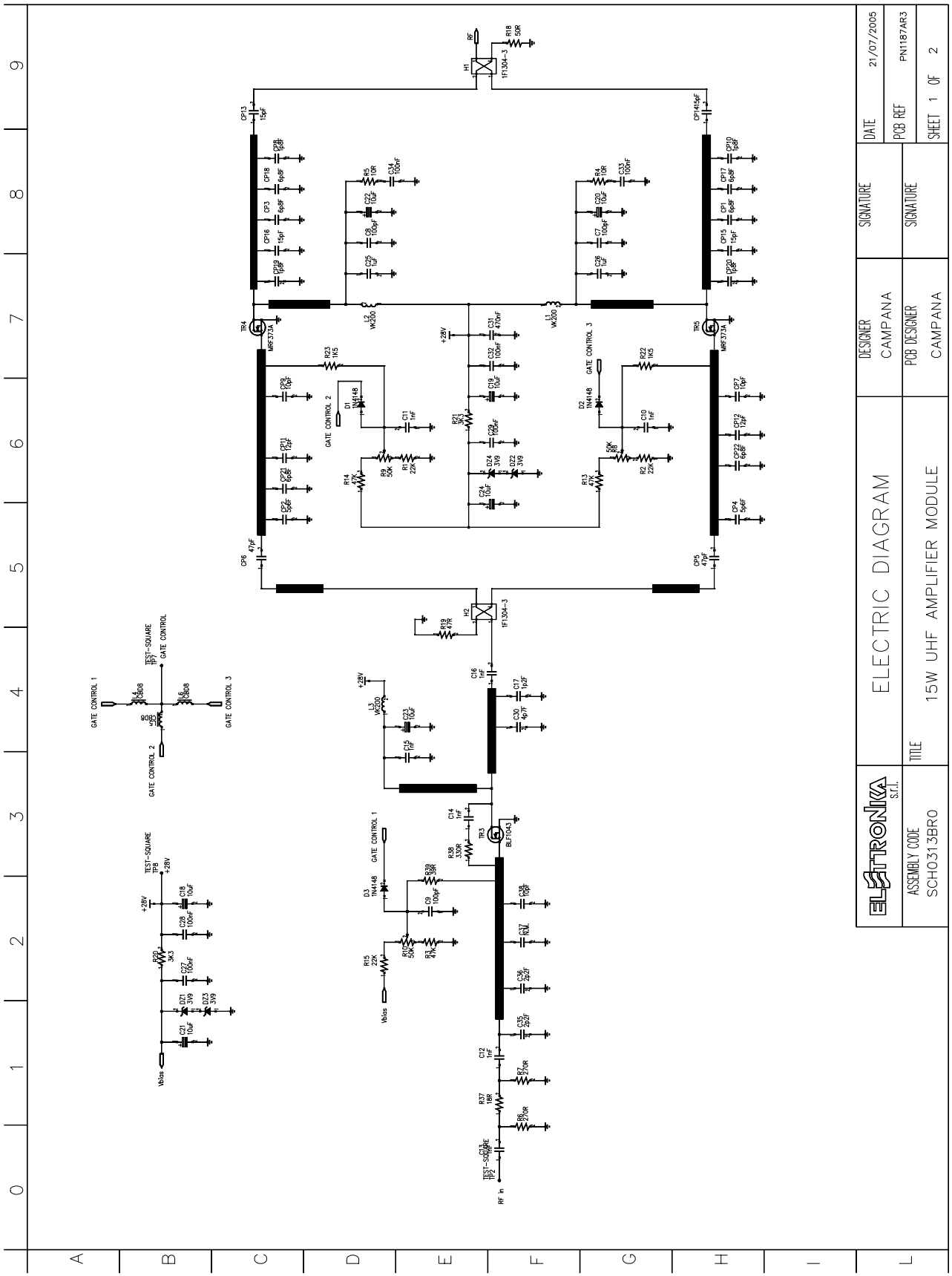
ELECTRIC DIAGRAM
15W UHF AMPLIFIER MODULE
ELETRONICA S.r.l.
ASSEMBLY CODE
SCH0313BRO
TITLE
DESIGNER
CAMPANA
PCB DESIGNER
CAMPANA
SIGNATURE
SIGNATURE
DATE
21/07/2005
PCB REF
PN1187AR3
SHEET 1 OF 2
GATE CONTROL 1
GATE CONTROL 2
GATE CONTROL 3
TEST-SQUARE
RF in
Vbias
+28V
MRF373A
BLF104A3
1F1304-3
VK200

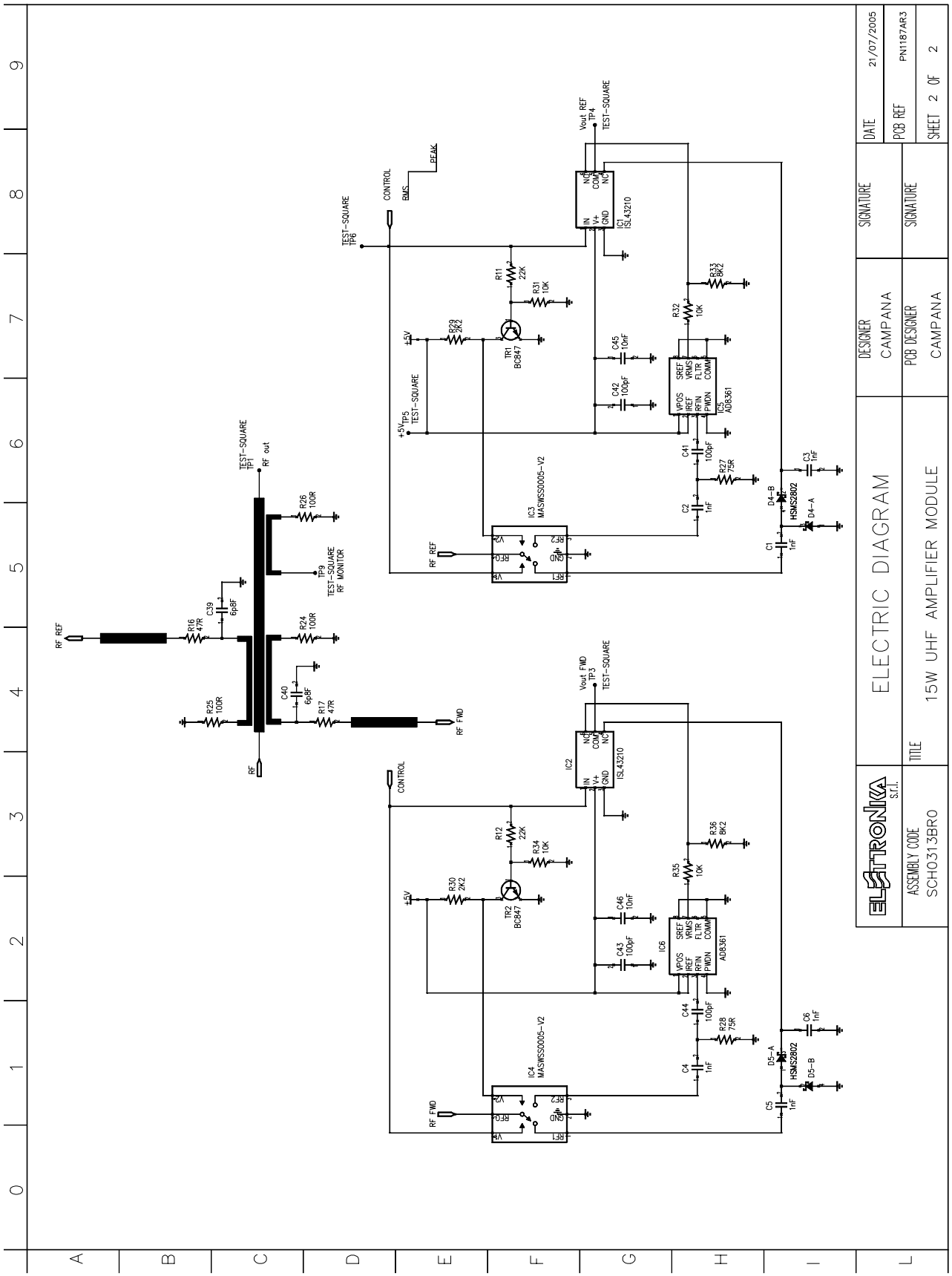
ELECTRIC DIAGRAM
15W UHF AMPLIFIER MODULE
ELETRONICA S.r.l.
ASSEMBLY CODE
SCH0313BRO
TITLE
DESIGNER
CAMPANA
PCB DESIGNER
CAMPANA
SIGNATURE
SIGNATURE
DATE
21/07/2005
PCB REF
PN1187AR3
SHEET 2 OF 2
RF REF
RF FWD
RF
RF out
TEST-SQUARE
TP1
TP9
TEST-SQUARE
RF MONITOR
R16
47R
R17
47R
R25
100R
R26
100R
R24
100R
C39
6p8F
C40
6p8F
CONTROL
BIAS
PEAK
TP6
TP5
+5V
Vout REF
TP4
Vout FWD
TP3
IC1
ISL43210
IC2
ISL43210
IC3
MASWSS0005-V2
IC4
MASWSS0005-V2
IC5
AD8361
IC6
AD8361
TR1
BC847
TR2
BC847
R11
22K
R12
22K
R31
10K
R34
10K
R29
2K2
R30
2K2
R32
10K
R35
10K
R33
8K2
R36
8K2
R27
75R
R28
75R
C41
100pF
C42
100pF
C43
100pF
C44
100pF
C45
10nF
C46
10nF
C1
1nF
C2
1nF
C3
1nF
C4
1nF
C5
1nF
C6
1nF
D4-A
D4-B
D5-A
D5-B
HSMS2802

COMPONENT LIST *SCH0313BR0*

Part Name/Number	Description	Qty.	Comps.	Page 1/2
CC 100nF-S 01065C	01065C Y5V 1206 COND	6	C27-29, C32-34	
CC 100pF-S 01092	01092 SMD 1206 COND	3	C7-9	
CC 10pF-S 01086	01086 SMD 1206 COND	1	C38	
CC 1206 N. M.	N. M. SMD 1206 COND	1	C37	
CC 1nF-S 01096	01096 SMD 1206 COND	7	C10-16	
CC 1p2F-S 01081	01081 SMD 1206 COND	1	C17	
CC 1uF 100V	01077A CERAMIC COND.	2	C25-26	
CC 2p2F-S 01081B	01081B SMD 1206 COND	2	C35-36	
CC 470nF 63V-S	01073 POLIESTER COND SMD	1	C31	
CC 4p7F-S 01083	01083 SMD 1206 COND	1	C30	
CE 10uF50V-S 01779A	01779A ELETTR SMD COND	7	C18-24	
CP 10pF-S	CHIP CHB	2	CP7, CP9	
CP 12pF-S	CHIP CHB	2	CP11-12	
CP 15pF-S	01121 CHIP CHB	4	CP13-16	
CP 1p8F-S	01102A CHIP CHB	4	CP8, CP10, CP19-20	
CP 47pF-S	01130 CHIP CHB	2	CP5-6	
CP 5p6F-S	01109 CHIP CHB	2	CP2, CP4	
CP 6p8F-S	CHIP CHB	6	CP1, CP3, CP17-18, CP21-22	
D 1N4148-S 03002	03002 SMD DIODE	3	D1-3	
DZ 3V9-S	03134 SMD ZENER DIODE	4	DZ1-4	
H ANAREN 1F1304-3	05368 HIBRID COUP. ANAREM	2	H1-2	
IND CBD8 05072	05072 INDUCTOR	3	L4-6	
IND VK200 05013	05013 INDUCTOR	3	L1-3	
R 10R-S 00017A	00017A RES 1/4W 5% SMD 1206	2	R4-5	
R 18R-S 00020A	00020A RES 1/4W 5% SMD 1206	1	R37	
R 1K5-S 00043A	00043A RES 1/4W 5% SMD 1206	2	R22-23	
R 22K-S 00057A	00057A RES 1/4W 5% SMD 1206	3	R1-2, R15	
R 270R-S 00034A	00034A RES 1/4W5% SMD 1206	2	R6-7	
R 330R-S 00035B	00035B RES 1/4W 5% SMD 1206	1	R38	
R 39R-S 00024A	00024A RES 1/4W 5% SMD 1206	1	R39	
R 3K3-1W-S	00400 RES 1W 5% SMD 2512	2	R20-21	
R 47K-S 00061A	00061A RES 1/4W 5% SMD 1206	3	R3, R13-14	
R 47R-1W-S	00384 RES 1W 5% SMD 2512	1	R19	
R 50R 60W TERM	00432 50 OHM 60W RF TERM	1	R18	
RV 50K-S-H/S 00797	00797 SMD VARIABLE RESISTOR	3	R8-10	
TR BLF1043-S	03469 LDMOS TRANSISTOR	1	TR3	
TR MRF373A-S	04031A LDMOS TRANSISTOR	2	TR4-5	
CC 100pF-S 01092C	01092C SMD 0805 COND	4	C41-44	
CC 10nF-S 01053A	01053A SMD 0805 COND	2	C45-46	
CC 1nF-S 01096A	01096A SMD 0805 COND	6	C1-6	
CC 6p8F-S 01084	01084 SMD 1206 COND	2	C39-40	
D HSMS2802 03207	03207 SMD DIODE	2	D4-5	
IC AD8361 04899	04899 SMD INTEG CIRCUIT	2	IC5-6	

Part Name/Number	Description	Qty.	Comps.	Page 2/2
IC ISL43210-S	04567 SMD INTEG CIRCUIT	2	IC1-2	
IC MASWSS0005-V2-S	04568 SMD INTEG CIRCUIT	2	IC3-4	
R 100R-S 00029A	00029A RES 1/4W 5% SMD 1206	3	R24-26	
R 10K-S 00053C	00053C RES 1/4W 5% SMD 0805	4	R31-32, R34-35	
R 22K-S 00057A	00057A RES 1/4W 5% SMD 1206	2	R11-12	
R 2K2-S 00045C	00045C RES 1/4W 5% SMD 0805	2	R29-30	
R 47R-S 00025A	00025A RES 1/4W 5% SMD 1206	2	R16-17	
R 75R-S 00221C	00221C RES 1/4W 5% SMD 0805	2	R27-28	
R 8K2-S 00052A	00052A RES 1/4W 5% SMD 1206	2	R33, R36	
TR BC847 03456	03456 NPN SMD TRANSISTOR	2	TR1-2	

Component layout SCH0261AR0 - Interface Board

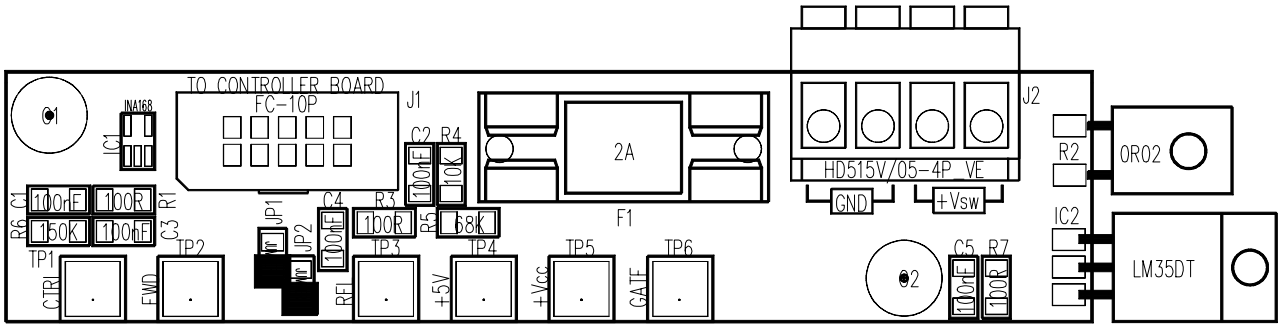

COMPONENT LIST *SCH0261AR0*

Part Name/Number	Description	Qty.	Comps.
CC 100nF-S 01065C	01065C Y5V 1206 COND	5	C1-5
FUSE 2A-PCB 7543	7543 PORTA FUSIBILE + FUSE 5x2	1	F1
IC INA168	04600A SMD INTEG CIRCUIT	1	IC1
IC LM35DT 00664	00664 INTEG CIRCUIT	1	IC2
J CON HD515V/05-4PVE	02881 + 02882 PANDUIT PCB CONN	1	J2
J FC-10P 02697-02699	02697+02699 PCB CONNECTOR POL	1	J1
JU JUMP2 02739-02742	02739+02742 MASCHIO PAN2	2	JP1-2
R 0R02	00356 RES 20W 1%	1	R2
R 100R-1%-S 00029D	00029D RES 1/4W 1% SMD 1206	3	R1, R3, R7
R 10K-1%-S 00053B	00053B RES 1/4W 1% SMD 1206	1	R4
R 150K-S 00067A	00067A RES 1/4W 5% SMD 1206	1	R6
R 68K-1%-S 00063B	00063B RES 1/4W 1% SMD 1206	1	R5

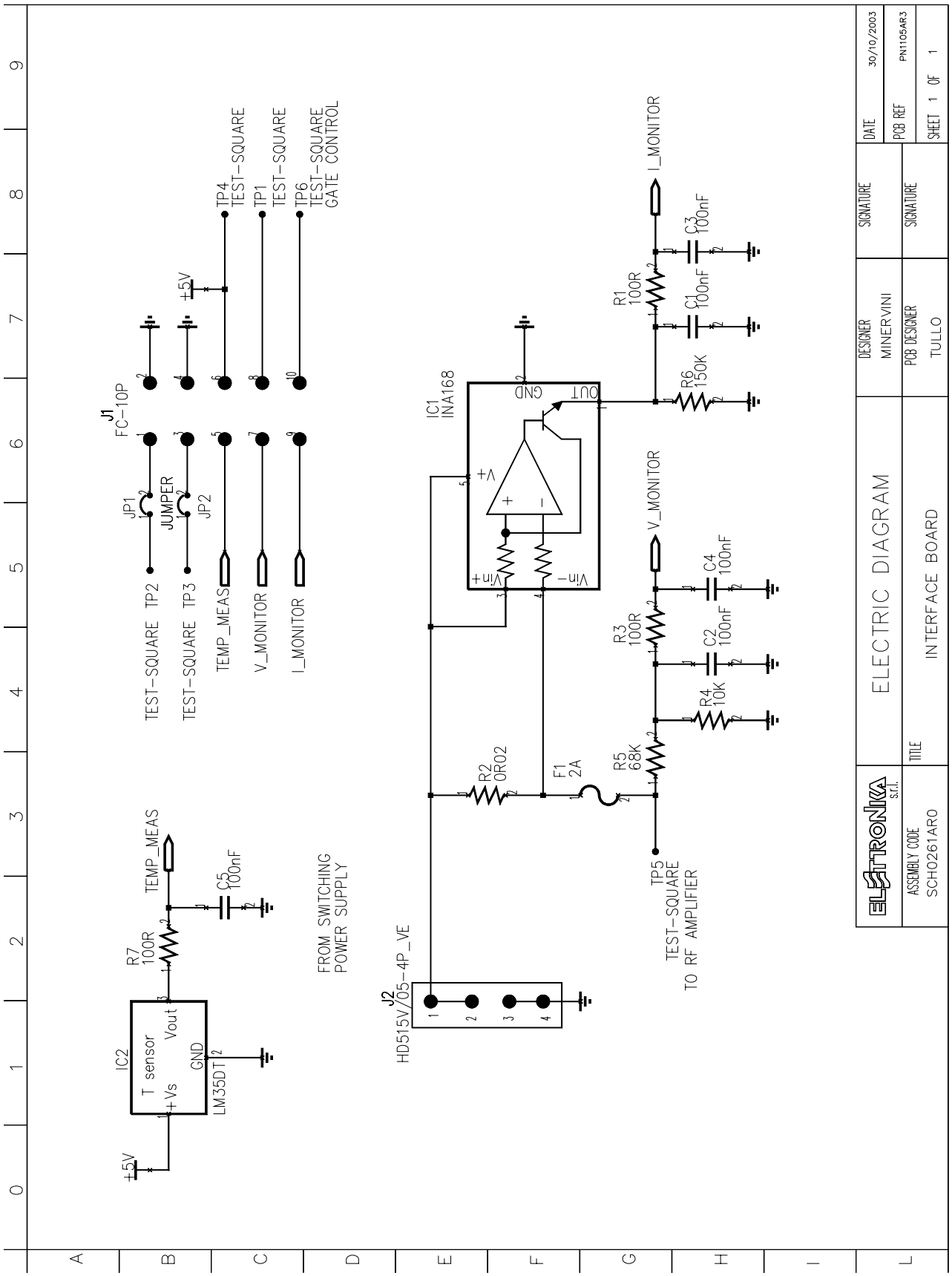
J1
FC-10P
JP1
JUMPER
JP2
TEST-SQUARE TP2
TEST-SQUARE TP3
TEMP_MEAS
V_MONITOR
I_MONITOR
TP4
TEST-SQUARE
TP1
TEST-SQUARE
TP6
TEST-SQUARE
GATE CONTROL
+5V
IC1
INA168
GND
OUT
V+
Vin+
Vin-
R1
100R
R6
150K
C1
100nF
C3
100nF
R3
100R
R4
10K
C2
100nF
C4
100nF
R5
68K
R2
0R02
F1
2A
TP5
TEST-SQUARE
TO RF AMPLIFIER
J2
HD515V/05-4P_VE
FROM SWITCHING
POWER SUPPLY
IC2
T sensor
+Vs
Vout
GND
LM35DT
R7
100R
C5
100nF
ELETTRONIKA s.r.l.
ELECTRIC DIAGRAM
INTERFACE BOARD
DESIGNER
MINERVINI
PCB DESIGNER
TULLO
SIGNATURE
DATE
30/10/2003
PCB REF
PN1105AR3
SHEET 1 OF 1
ASSEMBLY CODE
SCH0261ARO
TITLE

Component layout SCH0194AR1

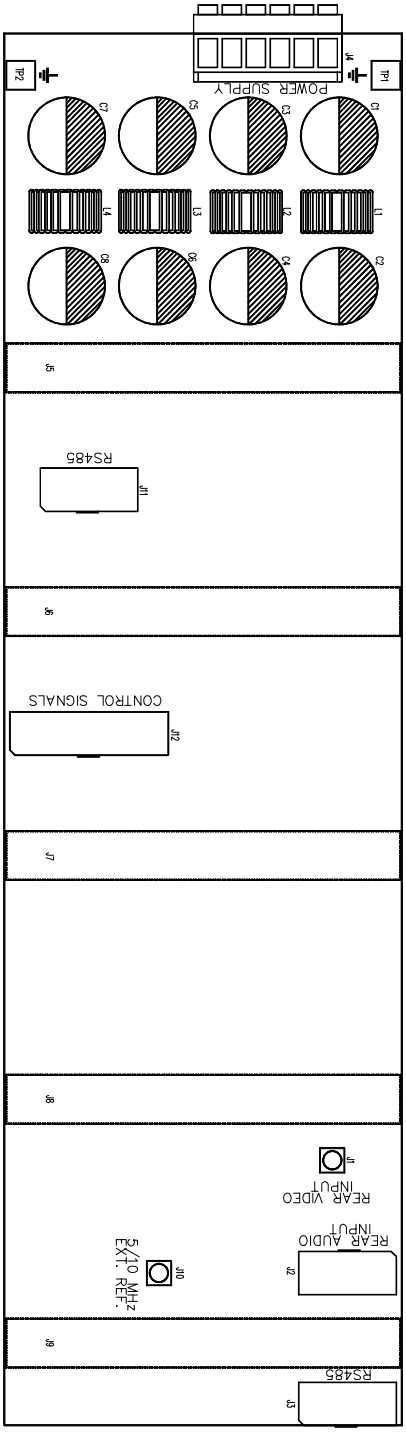

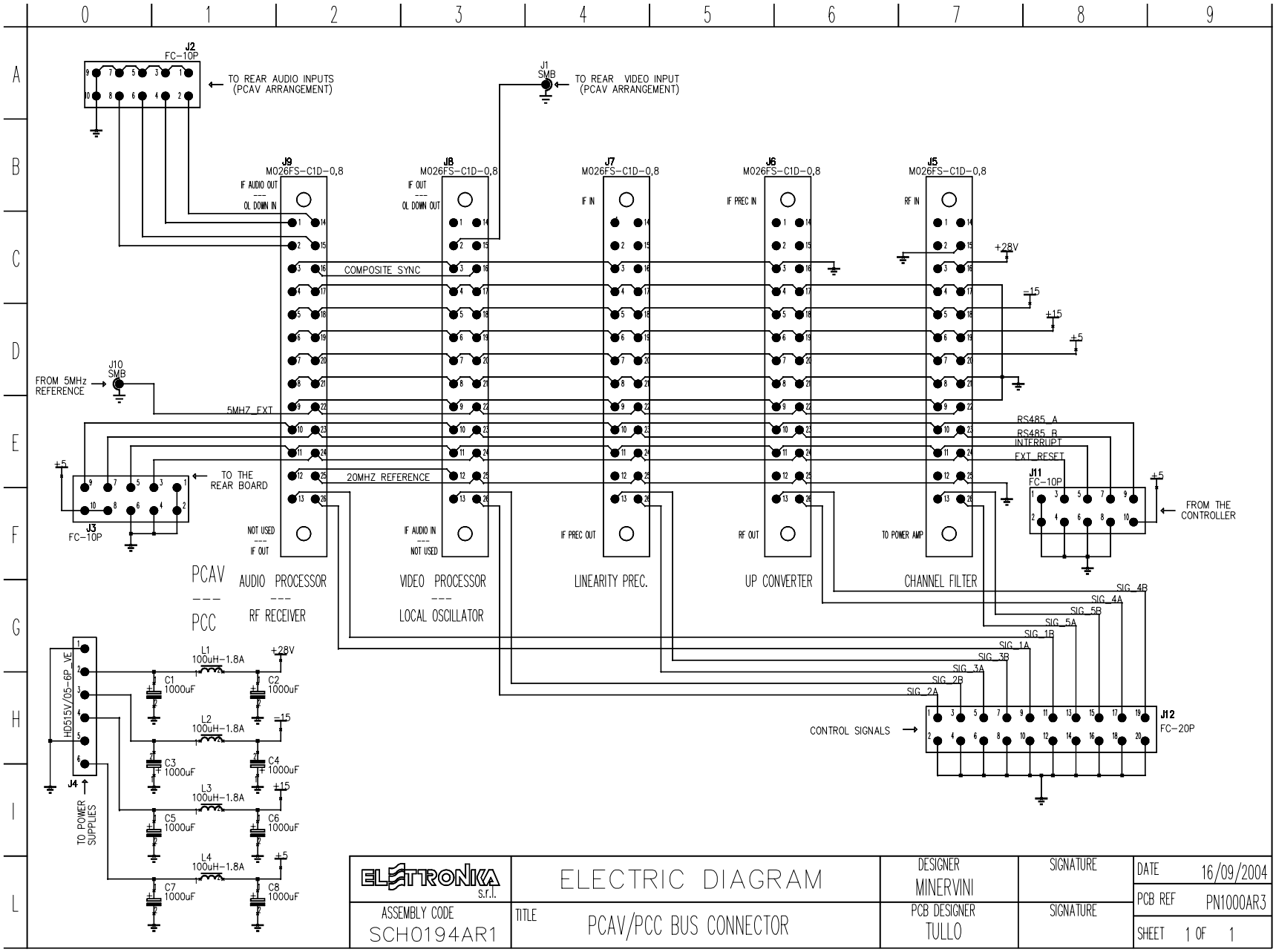

ELETTRONIKA s.r.l.	ELECTRIC DIAGRAM	DESIGNER MINERVINI	SIGNATURE	DATE 16/09/2004
ASSEMBLY CODE SCH0194AR1	TITLE PCAV/PCC BUS CONNECTOR	PCB DESIGNER TULLO	SIGNATURE	PCB REF PN1000AR3
				SHEET 1 OF 1

COMPONENT LIST *SCH0194AR1*

Part Name/Number	Description	Qty.	Comps.
CC 100nF-S 01065C	01065C Y5V 1206 COND	19	C1-2, C4, C7-8, C10-12, C15-18, C23, C25-28, C31-32
CC 10nF-S 01053B	01053B SMD 1206 COND	2	C14, C22
CC 1206 N. M.	N. M. SMD 1206 COND	2	C13, C24
CC 47pF-S 01100	01100 SMD 1206 COND	1	C21
CE 220uF50V LOW ESR	01799A ELETTR SMD COND LOW ESR	8	C3, C5-6, C9, C19-20, C29-30
D 1N4148-S 03002	03002 SMD DIODE	2	D3, D5
D 50WQ06FN	03019A SMD DIODE SCHOTTKY 5,5A	5	D1-2, D4, D6-7
DL KA-3528SGC 03057	03057 GREEN SMD LED DIODE	4	DL1-4
IC LM2593HVS-ADJ	04089 SMD INTEG CIRCUIT	2	IC3, IC8
IC LM2596S-5.0	04580 SMD INTEG CIRCUIT	1	IC2
IC LM317 04340	04340 INTEG CIRCUIT	1	IC1
IC TL082-S 04796A	04796A SMD INTEG CIRCUIT	2	IC5, IC7
IC TPS2034D-S	04088 SMD INTEG CIRCUIT	1	IC6
IC ULN2003A 4870	04870 SMD INTEG CIRCUIT	1	IC4
IND MS85 10uH-S	04948 INDUCTOR 2,7A	3	L1, L3, L6
IND T100uH-1.8A 4958	04958 TOROIDAL-STORAGE CHOKES	3	L2, L4-5
J CON HD515V/05-4PVE	02881 + 02882 PANDUIT PCB CONN	1	J1
J CON HD515V/05-6PVE	02883 + 02884 PANDUIT PCB CONN	1	J2
J FC-16P 02701-02700	02701+02700 PCB CONNECTOR POL	1	J3
R 100K-1%-S 00065B	00065B RES 1/4W 1% SMD 1206	2	R18, R20
R 100R-1%-S 00029D	00029D RES 1/4W 1% SMD 1206	3	R14-15, R25
R 10K-1%-S 00053B	00053B RES 1/4W 1% SMD 1206	4	R3, R7, R19, R26
R 10R-1%-S 00017D	00017D RES 1/4W 1% SMD 1206	4	R13, R17, R28-29
R 12K-1%-S 00054B	00054B RES 1/4W 1% SMD 1206	1	R10
R 1K0-1%-S 00041B	00041B RES 1/4W 1% SMD 1206	2	R5, R30
R 1K2-1%-S 00042A	00042A RES 1/4W 1% SMD 1206	4	R6, R8, R23, R27
R 220R-1%-S 00033C	00033C RES 1/4W 1% SMD 1206	1	R1
R 22K-1%-S 00057B	00057B RES 1/4W 1% SMD 1206	2	R9, R16
R 27K-1%-S 00058B	00058B RES 1/4W 1% SMD 1206	1	R22
R 2K2-1%-S 00045B	00045B RES 1/4W 1% SMD 1206	1	R12
R 330R-1%-S 00035A	00035A RES 1/4W 1% SMD 1206	1	R4
R 33K-1%-S 00059B	00059B RES 1/4W 1% SMD 1206	2	R11, R21
R 68K-1%-S 00063B	00063B RES 1/4W 1% SMD 1206	1	R24
R 6K8-1%-S 00051B	00051B RES 1/4W 1% SMD 1206	1	R2
RL 30.22.24 07569	07569 RELE	2	RLY1-2
TR BC856 03455	03455 PNP SMD TRANSISTOR	1	TR1

MAIN FEATURES

- Universal AC input / Full range
- Built-in active PFC function, PF>0.95
- Protections: Short circuit / Over load / Over voltage / Over temp.
- Forced air cooling by built-in DC fan
- Built-in cooling Fan ON-OFF control
- Fixed switching frequency at 110kHz

MECHANICAL SPECIFICATION

PIN N°	ASSIGNMENT
1	AC/L
2	AC/N
3	FG ⏚
4-5	DC OUTPUT -V
6-7	DC OUTPUT +V

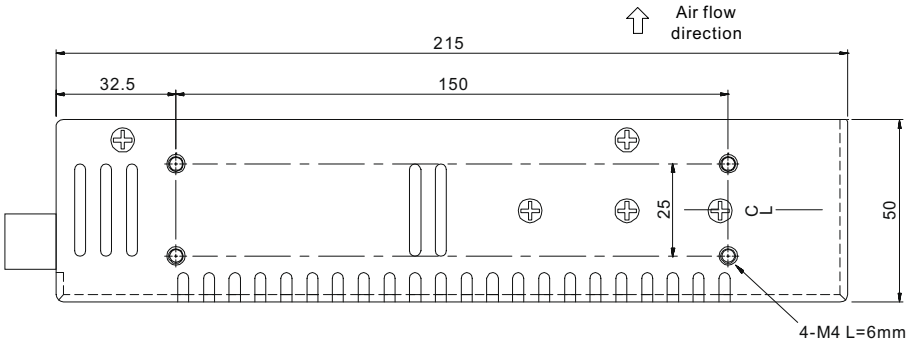

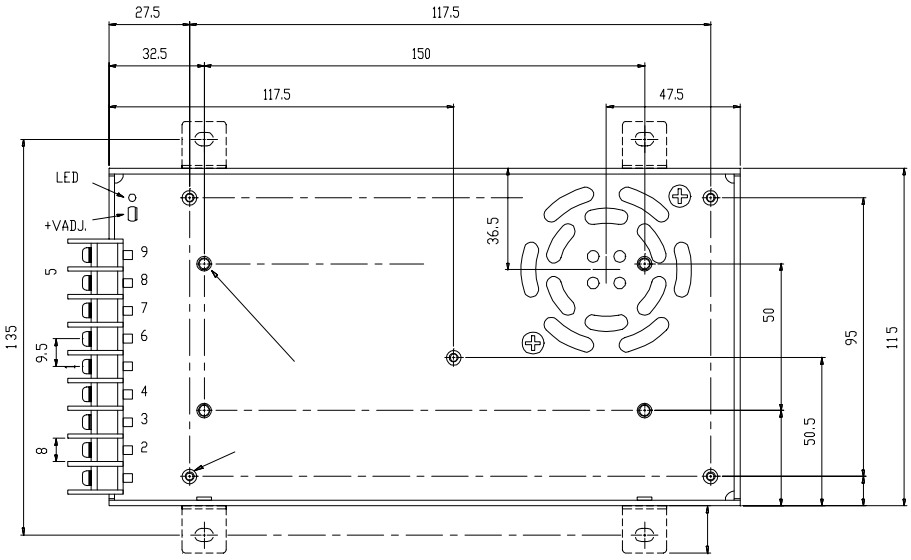

TECHNICAL CHARACTERISTICS

MODEL		SP300-27	SP300-48
OUTPUT	DC VOLTAGE	27V	48V
	RATED CURRENT	11A	6.25A
	CURRENT RANGE	0 ~ 11A	0 ~ 6.5A
	RATED POWER	297W	300W
	RIPPLE & NOISE (max.) Note 2	200mVp-p	240mVp-p
	VOLTAGE ADJ. RANGE	26 ~ 32V	41 ~ 56V
	VOLTAGE TOLERANCE Note 3	± 1.0%	± 1.0%
	LINE REGULATION	± 0.2%	± 0.2%
	LOAD REGULATION	± 0.5%	± 0.5%
	SETUP, RISE, HOLD TIME	1500ms, 50ms, 20ms at full load	
INPUT	VOLTAGE RANGE	88 ~ 264VAC 124 ~ 370VDC	
	FREQUENCY RANGE	47 ~ 63Hz	
	POWER FACTOR	PF>0.95/230VAC PF>0.95/115VAC at full load	
	EFFICIENCY (Typ.)	86%	85%
	AC CURRENT	4A/115VAC 2A/230VAC	
	INRUSH CURRENT (Max.)	18A/115VAC 36A/230VAC	
	LEAKAGE CURRENT	<2mA/240VAC	
PROTECTION	OVER LOAD	105 ~ 135% rated output power	
		Protection type: Hiccup mode, recovers automatically after fault condition is removed	
	OVER VOLTAGE	33.7 ~ 39.2V	57.6 ~ 67.2V
		Protection type: Hiccup mode, recovers automatically after fault condition is removed	
	FAN CONTROL O.T.P.	RTH1 or RTH2 >= 50°C FAN ON, <= 45°C FAN OFF, >= 70°C output shutdown	
ENVIRONMENT	WORKING TEMP.	-10 ~ +50°C (Refer to output load derating curve)	
	WORKING HUMIDITY	20 ~ 90% RH non-condensing	
	STORAGE TEMP., HUMIDITY	-20 ~ +85°C, 10 ~ 95% RH	
	TEMP. COEFFICIENT	± 0.03%/°C (0 ~ 50°C)	
	VIBRATION	10 ~ 500Hz, 2G 10min./1cycle, period for 60min. each along X, Y, Z axes	
SAFETY & EMC (Note 4)	SAFETY STANDARDS	UL1950, TUV EN60950 Approved	
	WITHSTAND VOLTAGE	I/P-O/P:3KVAC I/P-FG:1.5KVAC O/P-FG:0.5KVAC	
	ISOLATION RESISTANCE	I/P-O/P, I/P-FG, O/P-GD:100M Ohms/500VDC	
	EMI CONDUCTION & RADIATION	Compliance to EN55022 (CISPR22) Class B	
	HARMONIC CURRENT	Compliance to EN61000-3-2,-3	
	EMS IMMUNITY	Compliance to EN61000-4-2,3,4,5,6,8,11; ENV50204, Light industry level, criteria A	
OTHERS	MTBF	168.7K hrs min. MIL-HDBK-217F (25°C)	
	DIMENSION	215*115*50mm (L*W*H)	
	PACKING	1.18kg; 12pcs/14.2kg/0.98CUFT	

DERATING CURVE

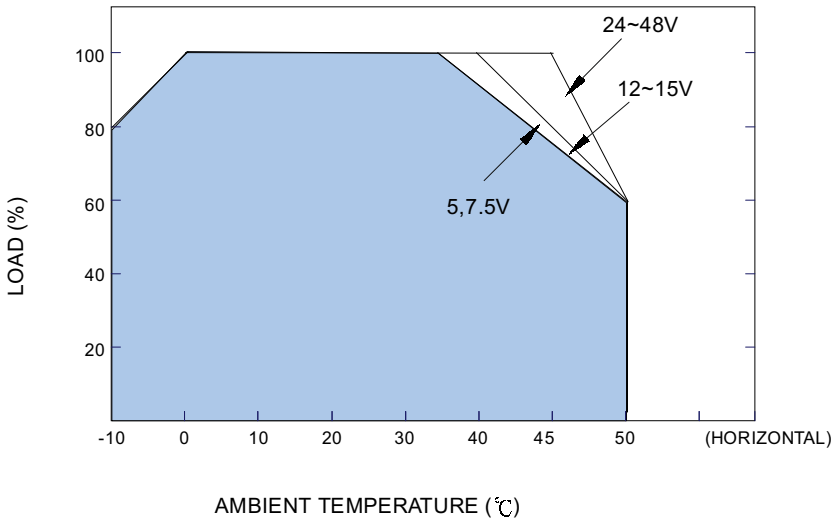
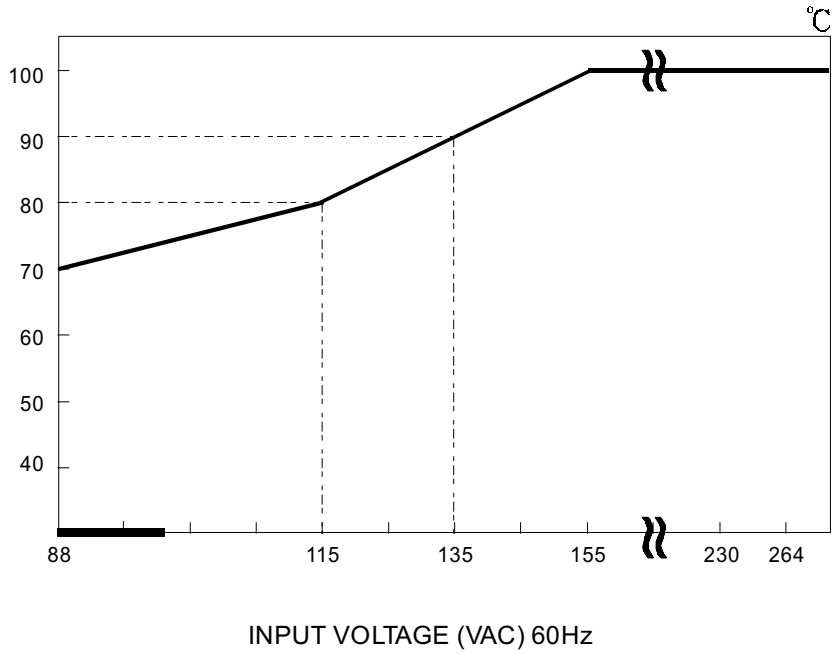
OUTPUT DERATING VS INPUT VOLTAGE