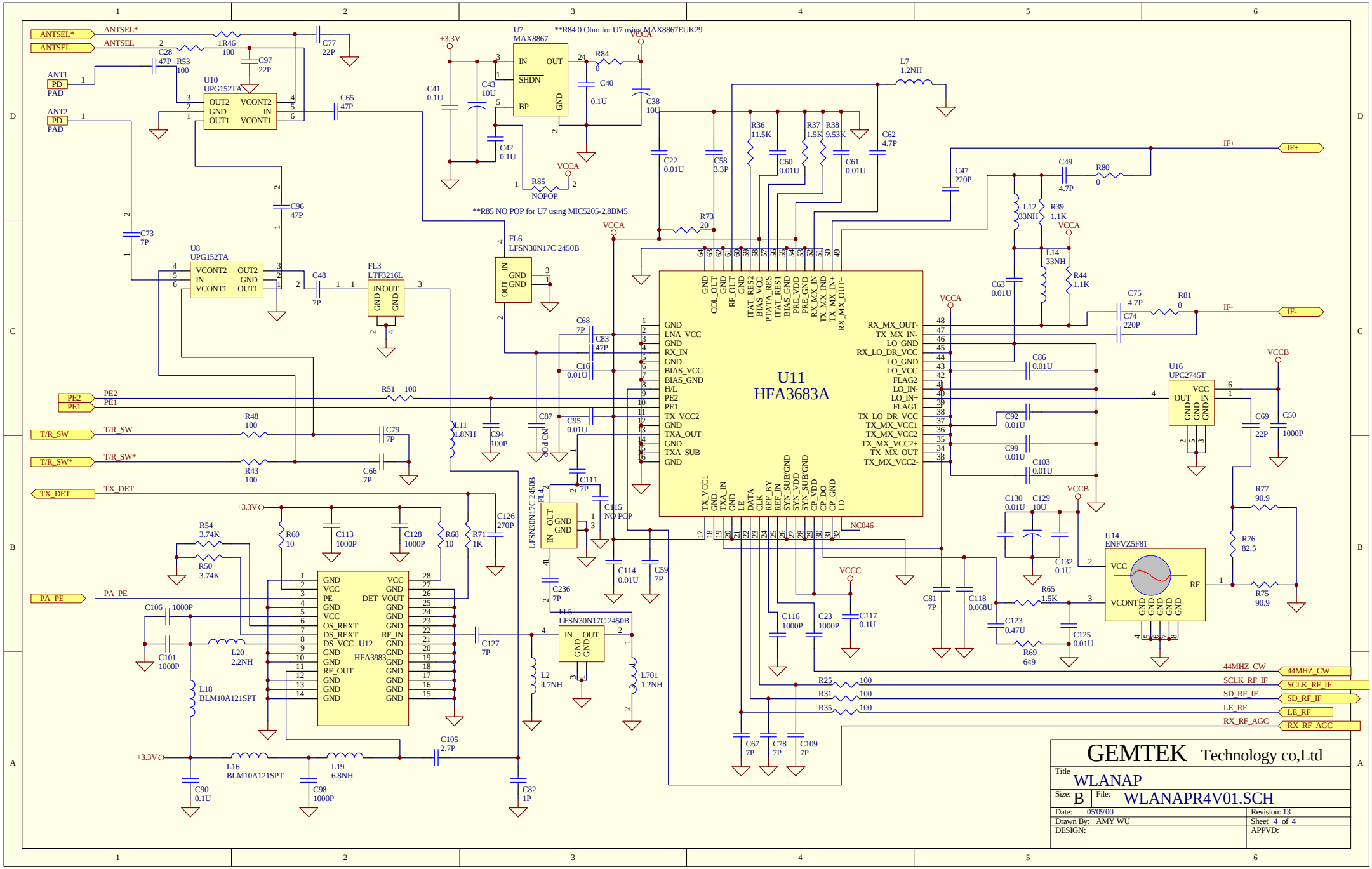
U11
HFA3683A
U7
MAX8867
**R84 0 Ohm for U7 using MAX8867EUK29
**R85 NO POP for U7 using MIC5205-2.8BM5
U10
UPG152TA
U8
UPG152TA
U12
HFA3983
U14
ENFVZ5F81
U16
UPC2745T
FL3
LTF3216L
FL6
LFSN30N17C 2450B
FL4
LFSN30N17C 2450B
FL5
LFSN30N17C 2450B
ANTSEL*
ANTSEL
ANT1
ANT2
PD
PAD
PE2
PE1
T/R_SW
T/R_SW*
TX_DET
PA_PE
IF+
IF-
44MHZ_CW
SCLK_RF_IF
SD_RF_IF
LE_RF
RX_RF_AGC
+3.3V
VCCA
VCCB
VCCC
GEMTEK Technology co,Ltd
Title
WLANAP
Size: B
File: WLANAPR4V01.SCH
Date: 05/09/00
Revision: 13
Drawn By: AMY WU
Sheet 4 of 4
DESIGN:
APPVD: