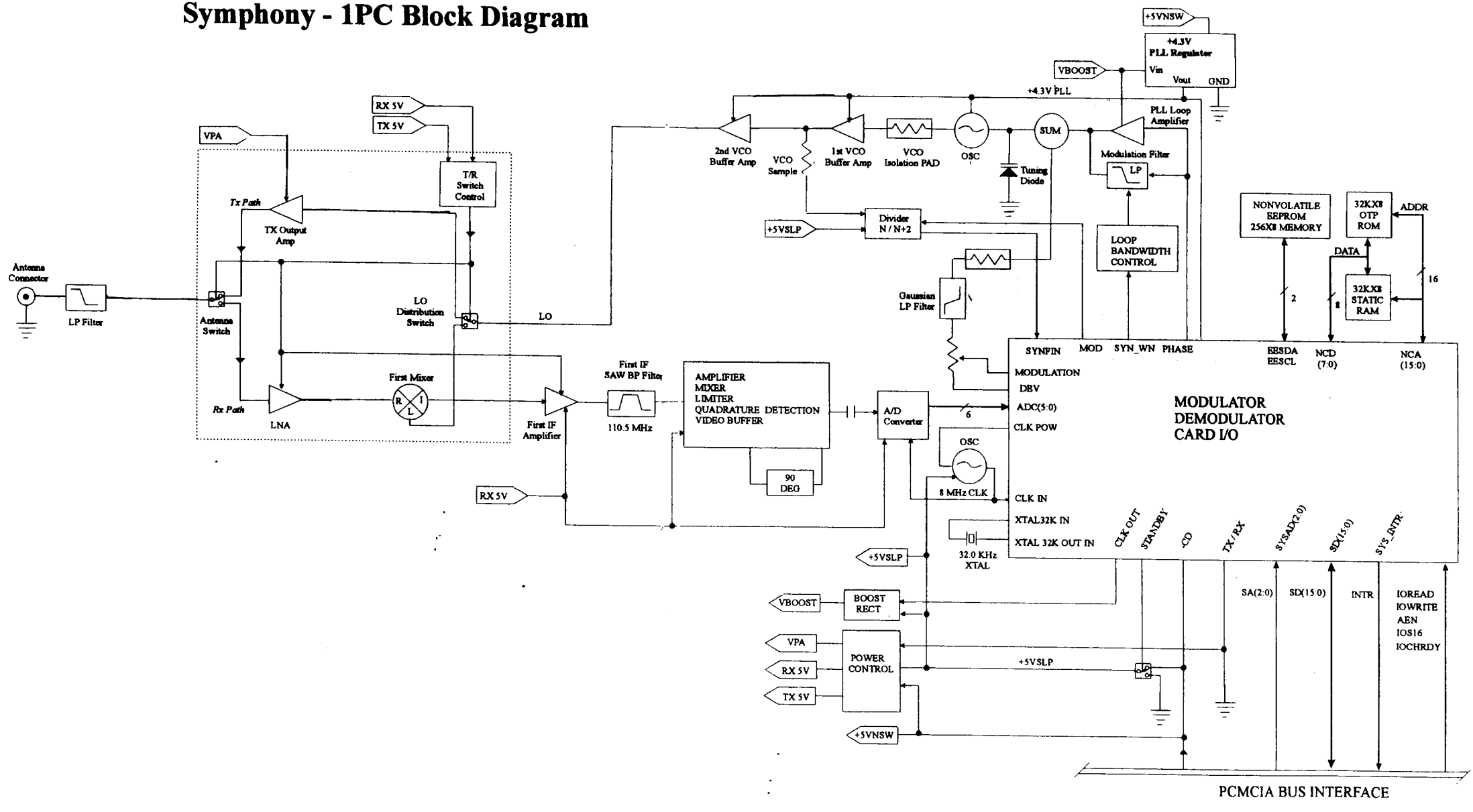Symphony - 1PC Block Diagram