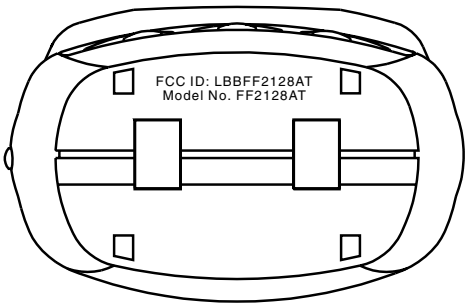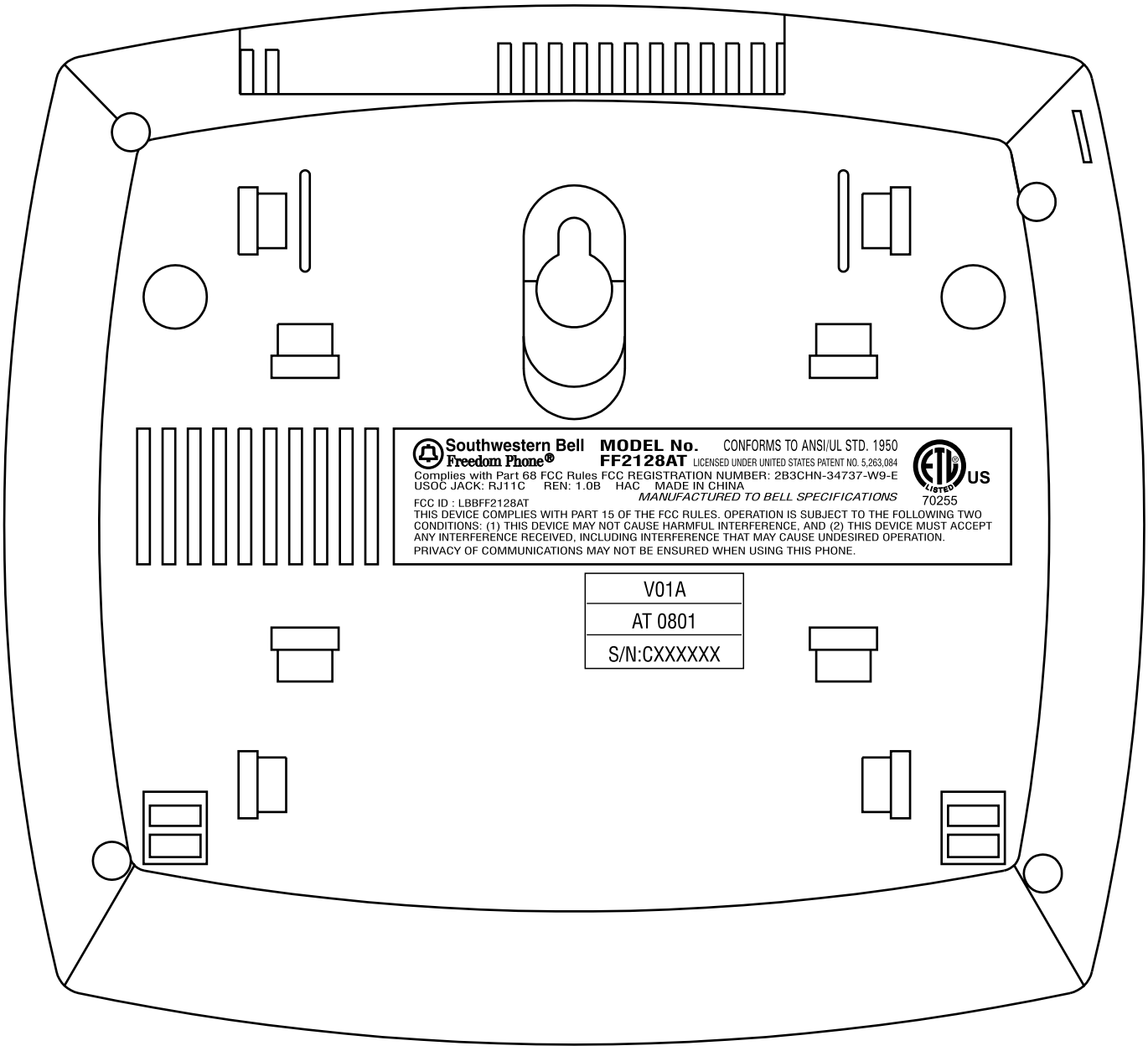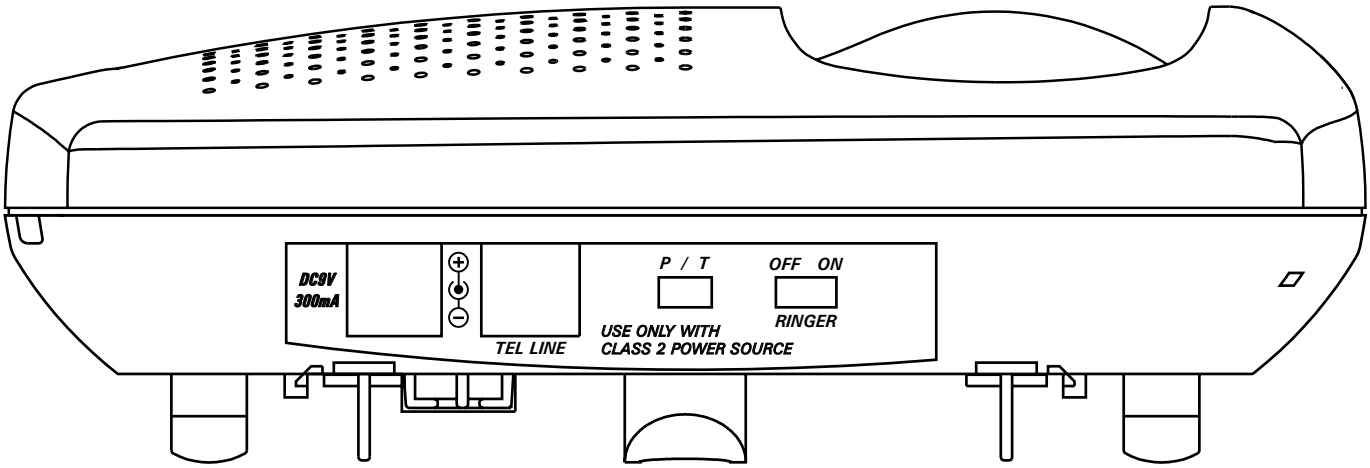FF2128
Aug.16, 2001