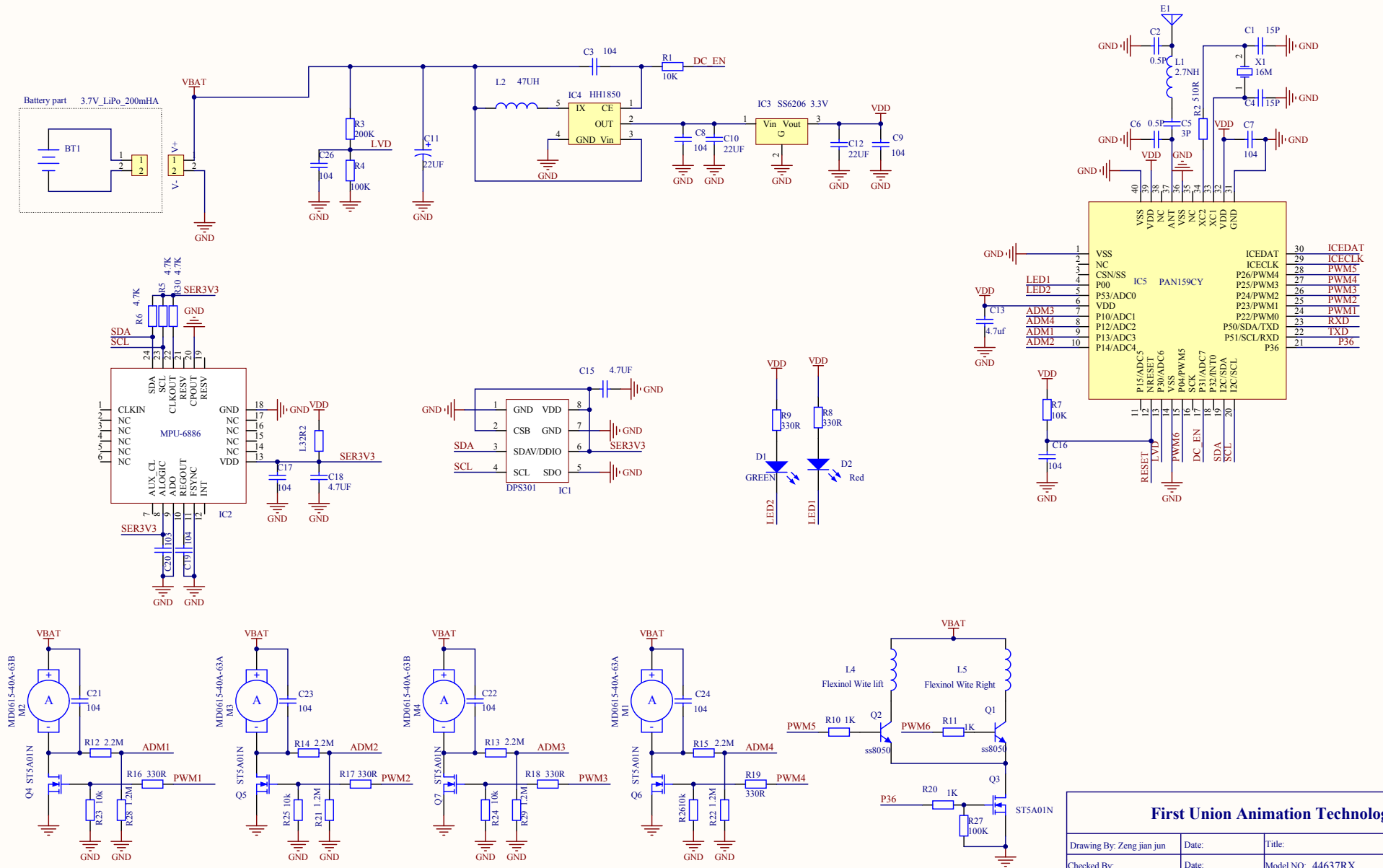

First Union Animation Technology Ltd.			
Drawing By: Zeng jian jun	Date:	Title:	
Checked By:	Date:	Model NO: 44637RX	
Approved By:	Date:	Size	Revision