Inverted F Antenna Specification

Summary

ITEM	ANT SPEC					
Model Name	2.4G ANT					
Center Frequency	Horizontal			Vertical		
	2400MHz	2400MHz	2500MHz	2400MHz	2400MHz	2500MHz
	-1.26	-0.76	-0.58	-5.25	-2.46	-1.86
MAX. Gain	-0.58dBi					
Polarization	Horizontal and Vertical					
Azimuth Beam Pattern	Omni-directional					
Impedance	50 Ohm					
Antenna Length	38.20mm					
Manufacture	ZHUHAI JIELI TECHNOLOGY CO.,LTD					

Antenna Photo & Length (mm)

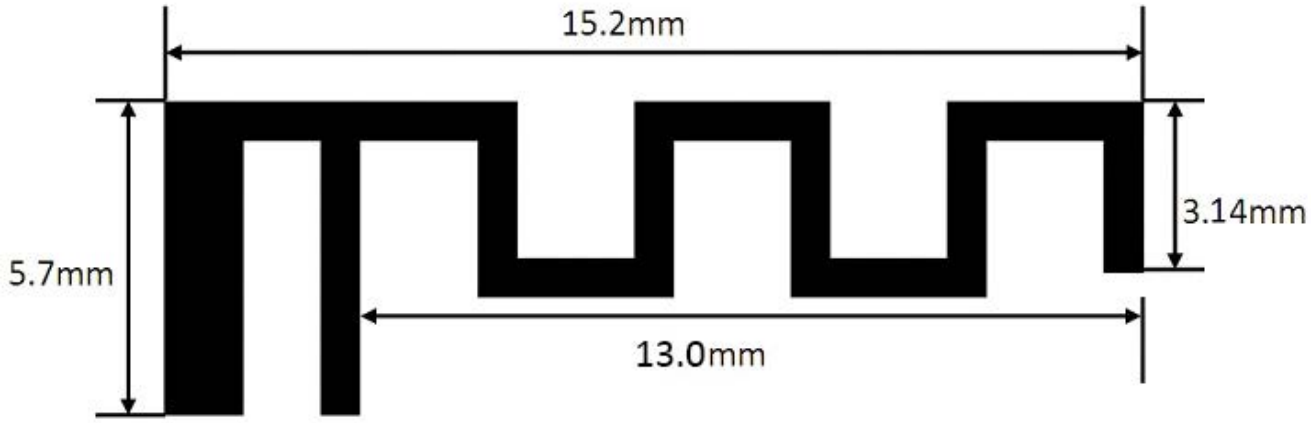

Manufacturer:Dongguan Xinyue Electronic Technology Co., Ltd
Manufacturer add.:Room 301, Building 15, No.52 Hongshi Road, Yantian, Fenggang Town,Dongguan City, Guangdong Province,China

Horizontal: 2400 MHz 2450 MHz 2500 MHz

Power (dBm)

Max: 0 Min: -40 Scale: 5/div

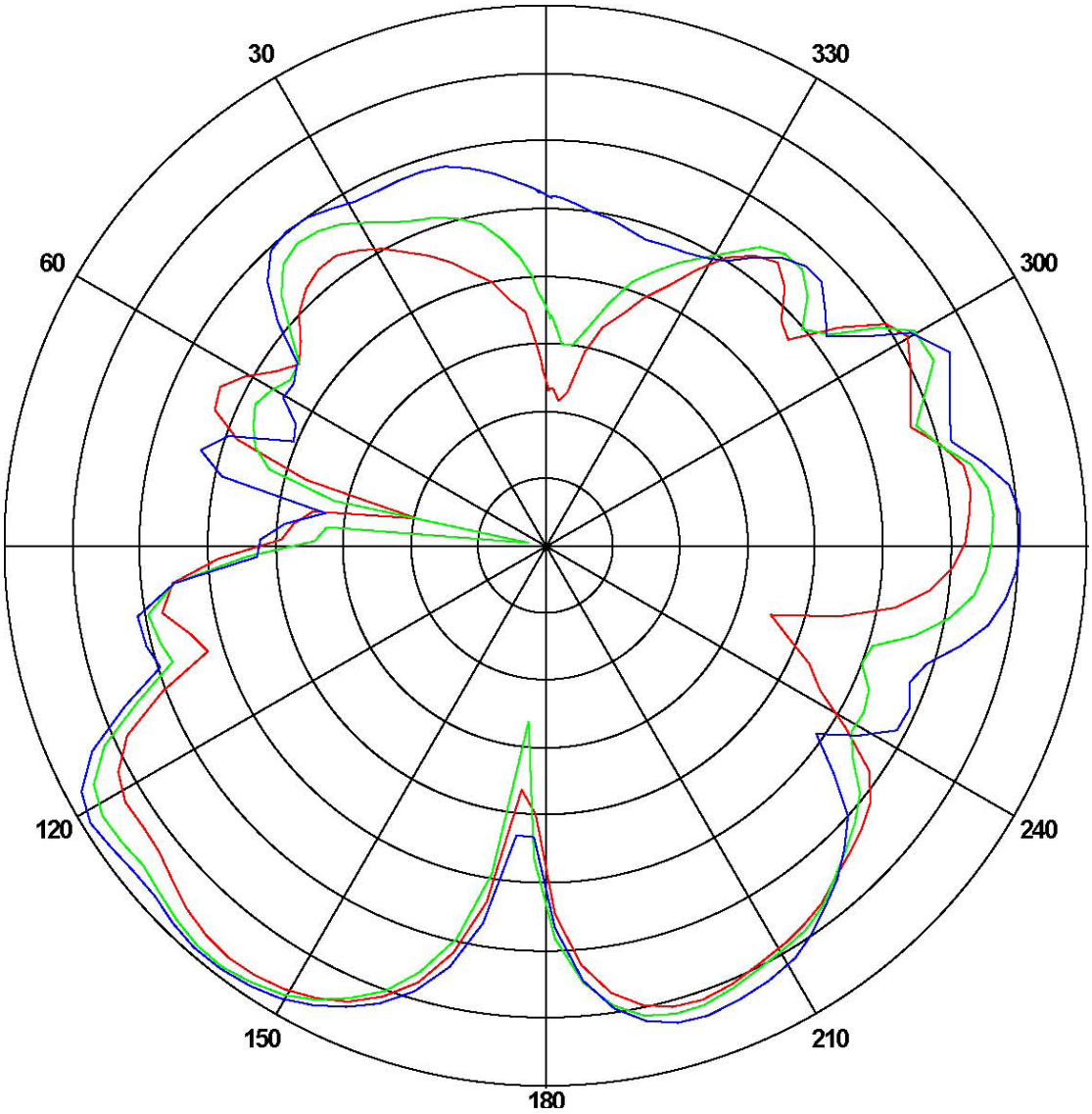

Frequency (MHz)	Gain(dBi)		
	Max	Min	Avg
2400	-1.26174	-30.0801	-7.18716
2450	-0.765802	-36.5604	-7.48023
2500	-0.585582	-22.0315	-6.59127

Vertical: 2400 MHz 2450 MHz 2500 MHz
Power (dBm)
Max: 0 Min: -30 Scale: 5/div

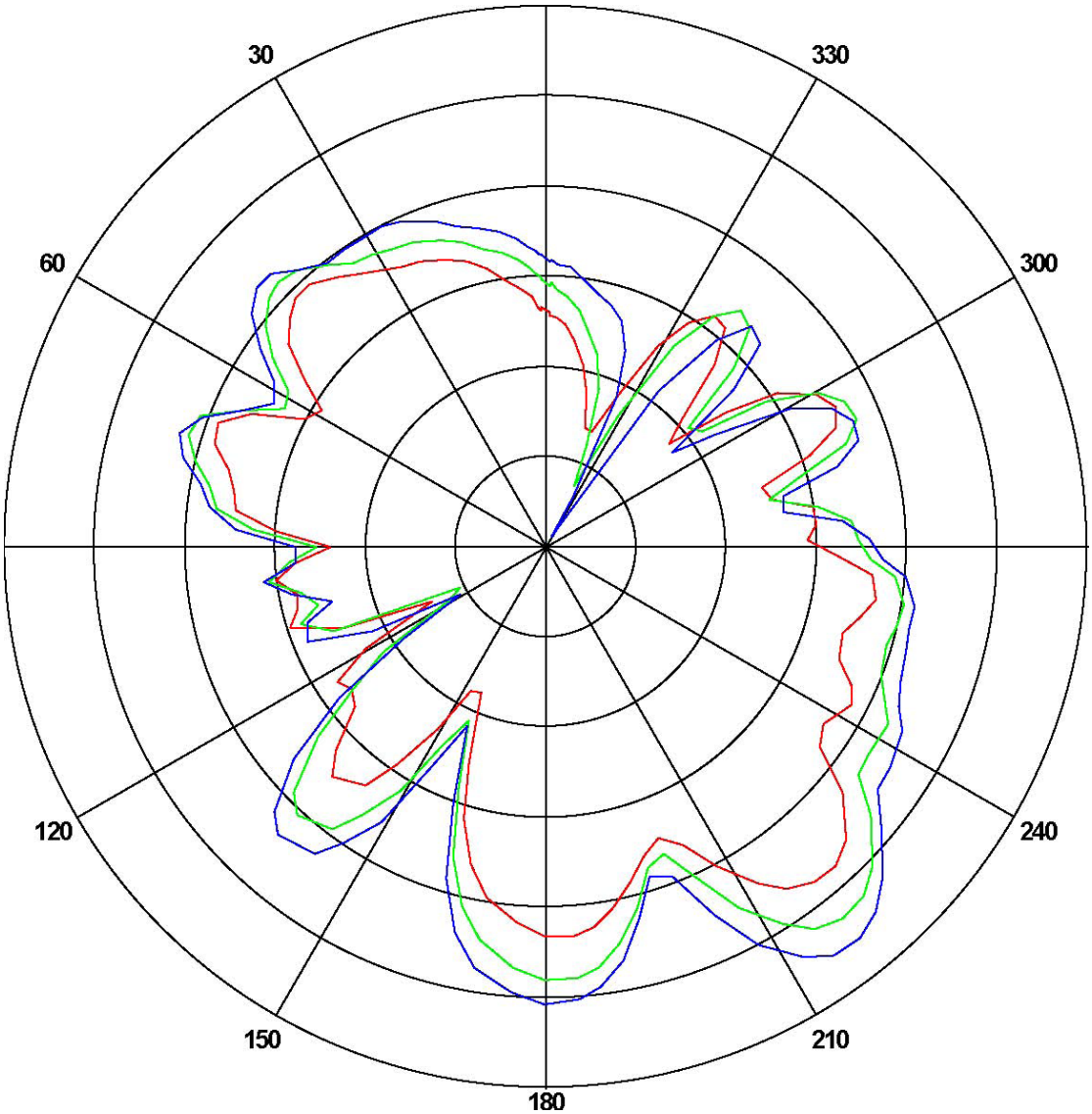

Frequency (MHz)	Gain(dBi)		
	Max	Min	Avg
2400	-5.2537	-22.1424	-12.4294
2450	-2.4652	-24.5837	-10.4702
2500	-1.86120	-29.5214	-9.20432

ANT Test Labs：Attestation of Global Compliance Co., Ltd.