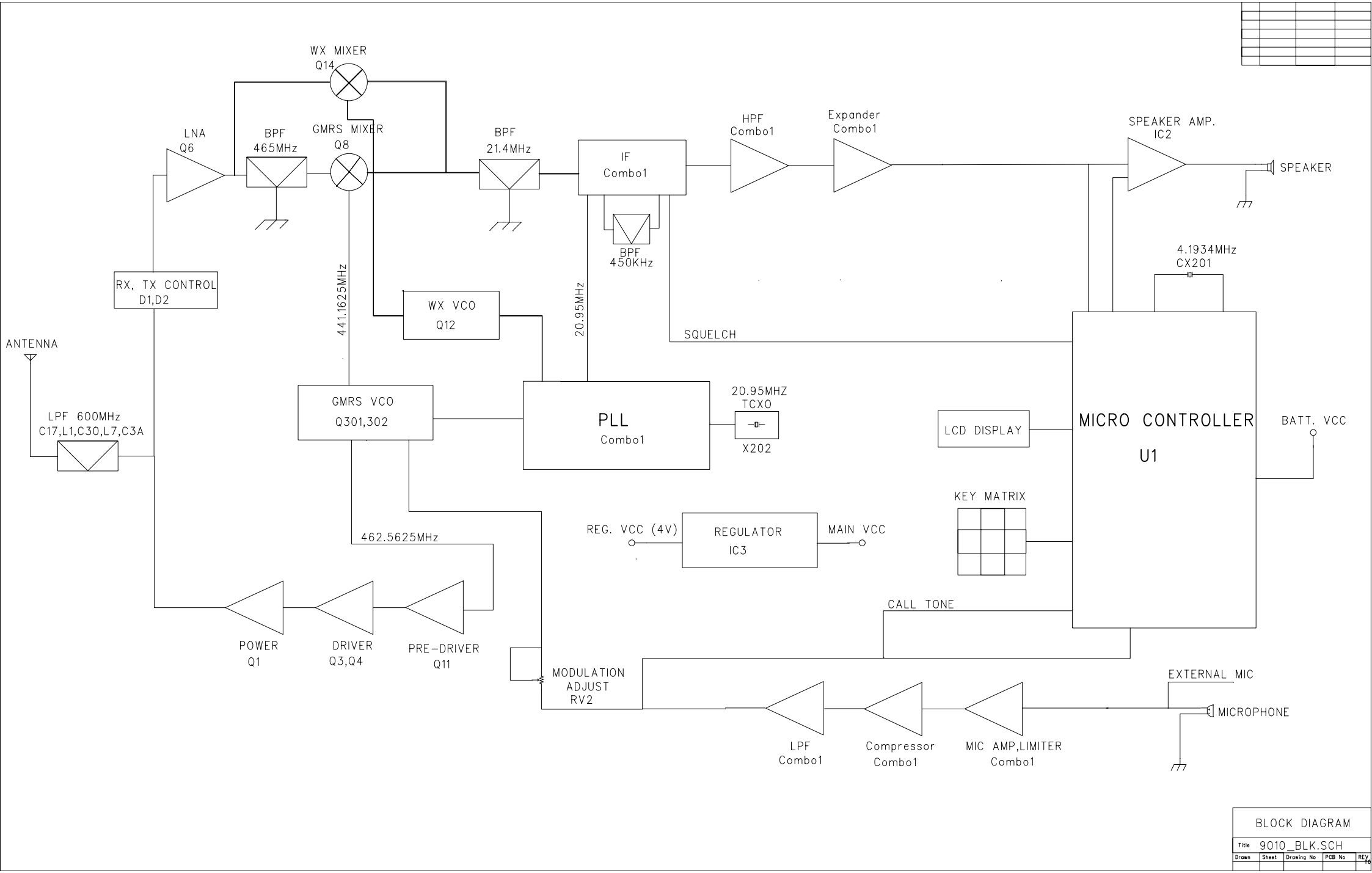

BLOCK DIAGRAM

Title	9010_BLK.SCH			
Drawn	Sheet	Drawing No	PCB No	REV. 1.0