Operating Manual

And Professional Installation Guide

CompactRF™

OEM Spread Spectrum Transceiver

Revision 1.00, Sept 15, 2000

Microhard Systems Inc.
#110, 1144 - 29th Ave. N.E.
Calgary, Alberta T2E 7P1
Phone: (403) 248-0028
Fax: (403) 248-2762
www.microhardcorp.com

CompactRF™

900 MHz
OEM Spread Spectrum
Transceiver

This manual contains information of proprietary interest to Microhard Systems Inc. It has been supplied in confidence to purchasers and users of the CompactRF, and by accepting this material the recipient agrees that the contents will not be copied or reproduced, in whole or in part, without prior written consent of Microhard Systems Inc.

Microhard Systems Inc. has made every effort to assure that this document is accurate and complete. However, the company reserves the right to make changes or enhancements to the manual and/or the product described herein at any time and without notice. Furthermore, Microhard Systems Inc. assumes no liability resulting from any omissions in this document, or out of the application or use of the device described herein.

Microhard Systems' products are appropriate for home, office, or industrial use, but are not authorized for utilization in applications where failure could result in damage to property or human injury or loss of life.

The electronic equipment described in this manual generates, uses, and radiates radio frequency energy. Operation of this equipment in a residential area may cause radio interference, in which case the user, at his own expense, will be required to take whatever measures necessary to correct the interference.

FCC Declaration of Conformity

This device complies with Part 15 of the FCC Rules. Operation is subject to the following two conditions: (1) this device may not cause harmful interference, and (2) this device must accept any interference received including interference that may caused undesired operation.

Microhard Systems Inc.'s products are warranted against all failures which occur as a result of defective material or workmanship within 12 months of purchase by the user. This warranty does not extend to products that, in the opinion of Microhard Systems Inc., have been subject to misuse, accidents, lightning strikes, improper installation or application, nor shall it extend to units which have, in Microhard Systems Inc.'s opinion, been opened, tampered with or repaired by an unauthorized facility.

Microhard Systems Inc.
Leaders in Wireless Telecom
#110, 1144 - 29th Ave. N.E.
Calgary, Alberta T2E 7P1
Phone: (403) 248-0028
Fax: (403) 248-2762
www.microhardcorp.com

© 2000 by Microhard Systems Inc., All Rights Reserved.
HyperTerminal is copyrighted by Hilgraeve Inc, and developed for Microsoft.
Microsoft and Windows are registered trademarks of Microsoft Corporation.
pcANYWHERE and Symantec are registered trademarks of Symantec Corp.
All other products mentioned in this document are trademarks or registered trademarks of their respective holders.
Manual Revision 1.00, Sept 15, 2000.

Contents

1. Introduction
   - 1.0 Product Overview ... 1
   - 1.1 Features ... 1
   - 1.2 About this Manual ... 2
   - 1.3 Unpacking and Inspection ... 3
2. Electrical/Physical
   - 2.0 Functional Block Diagram ... 5
   - 2.1 Pinout ... 6
   - 2.2 DC Characteristics ... 8
   - 2.3 AC Characteristics ... 9
3. Mode of Operation
   - 3.1 Data Mode ... 11
   - 3.2 Command Mode ... 12
     - 3.2.1 Menu Interface ... 13
     - 3.2.2 AT Command Interface ... 13
   - 3.3 Switching Between Command and Data Modes ... 14
     - 3.3.1 Switching Between AT Command Interface and Data Mode ... 14
     - 3.3.2 Switching Menu Interface and Data Mode ... 15
   - 3.4 Sleep Mode ... 15
4. Configuration
   - 4.1 Quick Start Approach ... 17
   - 4.2 AT Commands ... 18
   - 4.3 AT Registers ... 21
   - 4.4 Configuration Settings ... 22
     - S Register 101 - Operating Mode ... 23
     - S Register 102 - Serial Baud Rate ... 25
     - S Register 104 - Network Address ... 26
     - S Register 105 - Unit Address ... 26
     - S Registers 106 and 206 - Primary and Secondary Hopping Patterns ... 26
     - S Register 107 - Encryption Key ... 28
     - S Register 108 - Output Power Level ... 28
     - S Register 109 - Hopping Interval ... 29
     - S Register 110 - Data Format ... 29
     - S Registers 111 and 112 - Packet Minimum and Maximum Size ... 30
     - S Register 116 - Packet Character Timeout ... 30
     - S Registers 113 and 213 - Packet Retransmission/Packet Retry Limit ... 31
     - S Register 115 - Packet Repeat Interval ... 31
     - S Register 122 - Link Handshaking ... 32
     - S Register 117 - Modbus Mode ... 32
     - S Register 120 and 121- RTS/DCD Framing/Timeout ... 33
     - S Register 123 - RSSI Reading ... 33
5. Installation
   - 5.1 Estimating the Gain Margin ... 35
   - 5.2 Antennas and Cabling ... 37
     - 5.2.1 Internal Cabling ... 37
     - 5.2.2 Installing External Cables, Antennas and Lightning Arrestors ... 38

A. Modem Command Summary ... 41
B. Serial Interface ... 43
C. Factory Default Settings ... 45
D Performance Tables ... 47
....
F. Technical Specifications ... 51
G. Development Board Schematics ... 53
H. Mechanical Drawing ... 59
I. Glossary ... 61

1. Introduction

1.0 Product Overview

The CompactRF™ is a high-performance embedded wireless data transceiver. Operating in the 902-928 MHz ISM band, this frequency-hopping spread-spectrum module is capable of providing reliable wireless data transfer between almost any type of equipment which uses an asynchronous serial interface. The small-size and low operating current of this module make it ideal for mobile and battery powered applications. Typical uses for this module include:

- Automated Meter Reading (AMR);
- Vending Machines;
- Point of Sale Devices;
- Fleet Management;
- Telemetry;
- Remote Camera/Robot Control;
- Security Systems; and,
- Display Signs.

While a pair of CompactRF™ modules can link two terminal devices ("point-to-point" operation), multiple modules can be used together to create a network of various topologies, including "point-to-multipoint" and "repeater" operation. Multiple independent networks can operate concurrently, so it is possible for unrelated communications to take place in the same or a nearby area without sacrificing privacy or reliability.

1.1 Features

Key features of the CompactRF™ include:

- transmission within a public, license-exempt band of the radio spectrum[1] – this means that it can be used without access fees (such as those incurred by cellular airtime);
- a serial I/O data port with handshaking and hardware flow control, allowing the CompactRF™ to interface directly to any equipment with an asynchronous serial interface.

[1] 902-928 MHz, which is license-free within North America; may need to be factory-configured differently for some countries.

- 30 sets of user-selectable pseudo-random hopping patterns, intelligently designed to offer the possibility of separately operating multiple networks while providing security, reliability and high tolerance to interference;
- encryption key with 65536 user-selectable values to maximize security and privacy of communications;
- built-in CRC-16 error detection and auto re-transmit to provide 100% accuracy and reliability of data;
- ease of installation and use – the CompactRF™ gives the user the choice of a menu interface, or a subset of standard AT style commands, very similar to those used by traditional telephone line modems.

While the typical application for the CompactRF™ is to provide a short- to mid-range wireless communications link between DTEs, it can be adapted to almost any situation where an asynchronous serial interface is used and data intercommunication is required.

1.2 About this Manual

This manual has been provided as a guide and reference for installing and using CompactRF™ wireless transceivers. The manual contains instructions, suggestions, and information which will help you set up and achieve optimal performance from your equipment using the CompactRF™.

It is assumed that users of the CompactRF™ have either system integration or system design experience. Chapter 2 details the physical/electrical characteristics of the module. Chapter 3 gives an overview of the modes of operation. Chapter 4 describes the AT command register/menu setup and configuration. Chapter 5 is an installation/deployment guide. The Appendices, including the Glossary of Terms, are provided as informational references which you may find useful throughout the use of this manual as well as during the operation of the product.

Throughout the manual, you will encounter not only illustrations that further elaborate on the accompanying text, but also several symbols which you should be attentive to:

Caution or Warning: Usually advises against some action which could result in undesired or detrimental consequences.

Point to Remember: Highlights a key feature, point, or step which is worth noting, Keeping these in mind will make using the CompactRF more useful or easier to use.

Tip: An idea or suggestion is provided to improve efficiency or to make something more useful.

With that in mind, enjoy extending the boundaries of your communications with the CompactRF™.

1.3 Unpacking and Inspection

The following items should be found in the shipping carton. Inspect the contents for any shipping damage. Report damages or shortages to the distributor from which the unit was purchased. Keep all packing materials in the event that transportation is required in the future.

Package contents for the CompactRF development kit (normal distribution):

1	CompactRF™ Wireless Module	2
2	Operating Manual (this document)	1
3	12V Wall Adapter	2
4	DB9 Straight-through Serial Cable	2
5	Rubber Duck Antenna	2
6	CompactRF™ Development Board	2

2. Electrical/Physical

2.0 Functional Block Diagram

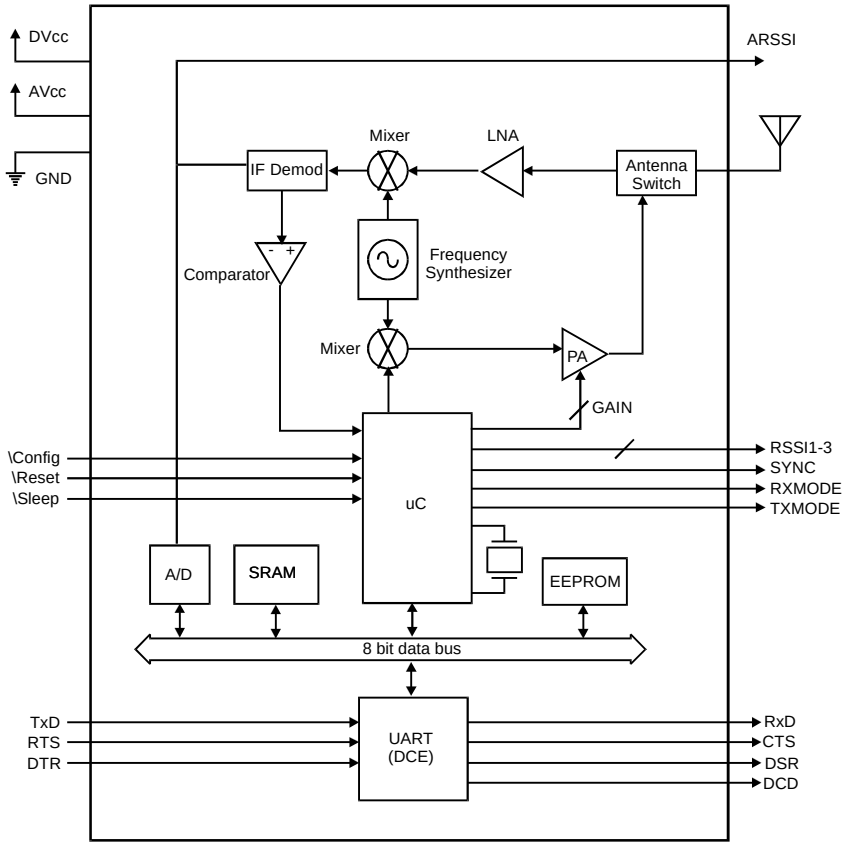

2.1 Pinout

Figure 1 provides a top-view pinout drawing of the CompactRF module. The corner pins (1,18,19,36) are labeled directly on the module.

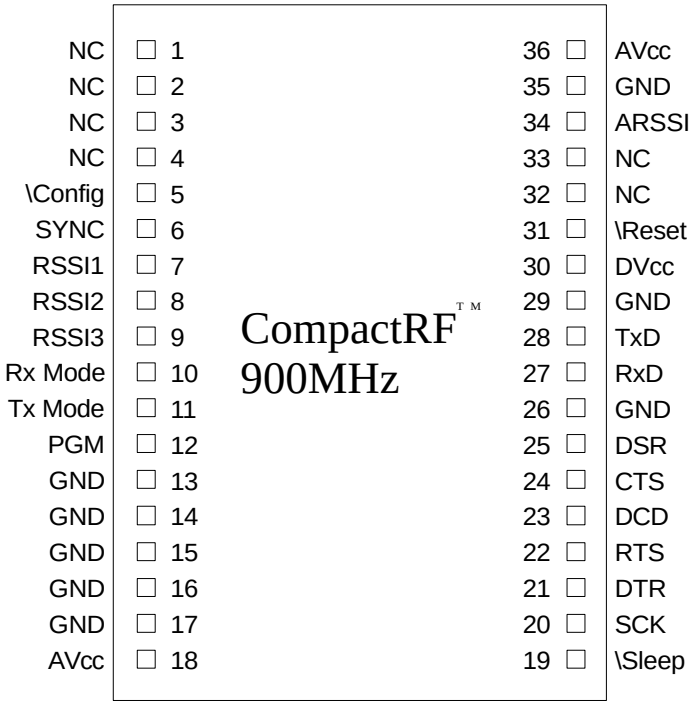

Figure 1 - Pinout (Top View)

Pin Name	No.	Description	I/O
ARSSI	34	Provides an analog level of the received signal strength. This is an uncalibrated signal, and will provide only rough measurements of signal strength.	O
AVcc	18,36	Positive Supply for Radio Circuitry. See Section 2.1 for DC Characteristics	
\Config	5	Momentarily assert low to enter configuration mode. See Section 2.2	I
CTS	24	RS-232 Clear to Send. Active low (TTL level) output. See Appendix B for a complete description of all RS-232 signals.	O
DCD	23	RS-232 Data Carrier Detect. Active low (TTL level) output.	O
DSR	25	RS-232 Data Set Ready. Active low (TTL level) output.	O

Pin Name	No.	Description	I/O
DTR	21	RS-232 Data Terminal Ready. Active low (TTL level) input.	I
DVcc	30	Positive Supply for Logic circuitry and I/O pins. See Section 2.2 for DC Characteristics	
GND	13-17 26,29, 35	Ground reference for logic, radio and I/O pins.	
PGM	12	Programming Status indicator. This output is for factory use only, and should normally be left disconnected.	O
\Reset	31	Active low reset input to the module. See Section 2.3 for timing information.	I
SYNC	6	Active high output indicates the modem is synchronized with at least one other modem	O
RSSI1	7	Receive Signal Strength Indicator 1. This output is the first of the three RSSI indicators to become active high as the signal strength increases. See Table 2 for details	O
RSSI2	8	Receive Signal Strength Indicator 2. This output is the second RSSI indicator to become active high as the signal strength increases. See Table 2 for details.	O
RSSI3	9	Receive Signal Strength Indicator 3. This output is the last RSSI indicator to become active high as the signal strength increases. See Table 3 for details.	O
RTS	22	RS-232 Request to Send. Active low (TTL level) input.	I
RxD	27	RS-232 Receive Data. TTL level output.	O
RXMODE	10	Active high output indicates module is receiving data over the RF channel.	O
SCK	20	ISP Programming Clock. Used in conjunction with RxD and TxD when upgrading the FLASH-based firmware.	I
TxD	28	RS-232 Transmit Data. TTL level input.	I
TXMODE	11	Active high output indicates module is transmitting data over the RF channel.	O
\Sleep	19	Assert low to put the unit to sleep. See Section 2.3 for timing information.	I
NC	1-4, 32,33	No Connect	

For detailed mechanical drawings, refer to Appendix H

2.2 DC Characteristics

Sym	Characteristic	Min	Typ	Max	Units
AV_{CC}	Radio Supply Voltage	4.9	5.0	5.5	V
DV_{CC}	Logic Supply Voltage	4.75	5.0	5.5	V
V_{POT}	Power On Reset Threshold Voltage	1.8	2	2.2	V
V_{RST}	Reset Pin Threshold Voltage		DV_{CC}/ 2		V
AI_{CCR}	Radio Supply Current in Receive Mode	54	60	66	mA
AI_{CCT0}	Radio Supply Current at 1mW Transmit	68	75	82	mA
AI_{CCT1}	Radio Supply Current at 10mW Transmit	96	107	118	mA
AI_{CCT2}	Radio Supply Current at 100mW Transmit	185	206	227	mA
AI_{CCT3}	Radio Supply Current at 1W Transmit	517	575	633	mA
AI_{SL}	Radio Sleep Current		500		uA
DI_{CC}	Logic Supply Current	22	25	28	mA
DI_{SL}	Logic Sleep Current		1.0		mA
V_{IL}	Input Low Voltage (Pins 5,19,21,22,28)	-0.5		$.3DV_{CC}$	V
V_{IH}	Input High Voltage (Pins 5,19,21,22,28)	$0.6V_{CC}$		V_{CC}+.5	V
V_{OL}	Output Low Voltage (Pins 6-11,23-25,27)			0.6	V
V_{OH}	Output High Voltage(Pins 6-11,23-25,27)	4.2			V
I_{SRCE}	Sourcing Current (Pins 6-11,23-25,27) Per Pin			10	mA

2.3 AC Characteristics

Sym	Characteristic	Min	Typ	Max	Units
T_{TOUT}	Reset Delay Time-Out Period	12.8	16.0	19.2	ms
T_{CFG}	\Config. pulse duration	See Note			ms
T_{S2SD}	\Sleep low to internal sleep delay	0		See Note	ms
T_{SN}	Snooze duration		10		ms
T_{SNIFF}	Sniff duration		100		us
T_{WDLY}	\Sleep high to internal wakeup	0		T_{SN}	ms

Note: The minimum duration for T_{CFG} is one hop interval. The hop interval is set by the user, and is stored in register S109. The maximum delay for T_{S2SD} is also one hop interval.

Figure 2 provides timing information for both power-up reset and the \Reset line operation. A fixed internal reset delay timer of roughly 16ms is triggered as the V_{POT} or V_{RST} threshold is reached.

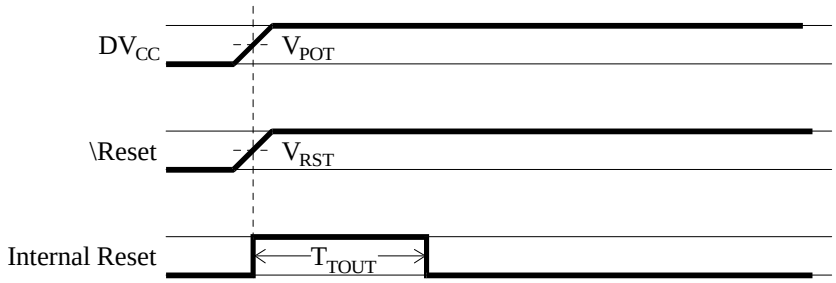

Figure 2. Reset Timing

Figure 3 illustrates the sleep operation for the CompactRF. When the \Sleep line is asserted, the modem will internally go to sleep within one hop interval. While sleeping, the modem will "sniff" every 10 ms to check if the \Sleep line has again gone high. If the \Sleep line is low, the modem goes back to sleep. If it is high, the modem wakes up and resumes normal operation.

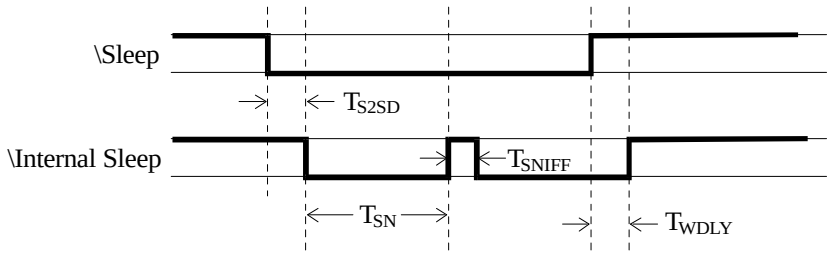

Figure 3. Sleep/Wakeup Timing

3. Modes of Operation

The CompactRF™ modem can be easily configured to meet a wide range of needs and applications. The module is designed such that all communication is through one serial port (Pins 21 to 28 on the module). This port has two functions:

1. It provides the asynchronous interface with the host equipment for data that is sent/received on the RF channel. When operating in this fashion, the module is said to be in **data mode**.
2. It is also used for configuring and programming the module. When operating in this fashion, the module is said to be in **command mode**.

In addition to **data mode** and **command mode**, there is a third mode of operation called **sleep mode**. The module will always be in one of these three modes.

3.1 Data Mode

Data mode is the normal operating mode of the CompactRF. When in data mode, the CompactRF is communicating with other CompactRF modules, and facilitating wireless asynchronous serial communication amongst two or more terminal devices. There are three basic elements to any CompactRF communications network:

- One module configured as the **Master**
- Zero or more modules configured as **Repeaters**
- One or more modules configured as **Slaves**

The function of the Master is to provide synchronization for the entire network, and to control the flow of data. There is always one Master per network. The Master is the ultimate destination for all data collected at the various Repeater's and Slave's serial ports. With the network set up for Point-to-Multipoint communication, all data received at the Master's serial port is transmitted to every Repeater and Slave in the network. The CompactRF is a frequency hopping transceiver, meaning that it "hops" to a new frequency after a predetermined time interval. This time interval is a fixed time set by the user, and can range from 14ms to 180ms. The CompactRF hops according to a pseudorandom pattern of 50 different channels.

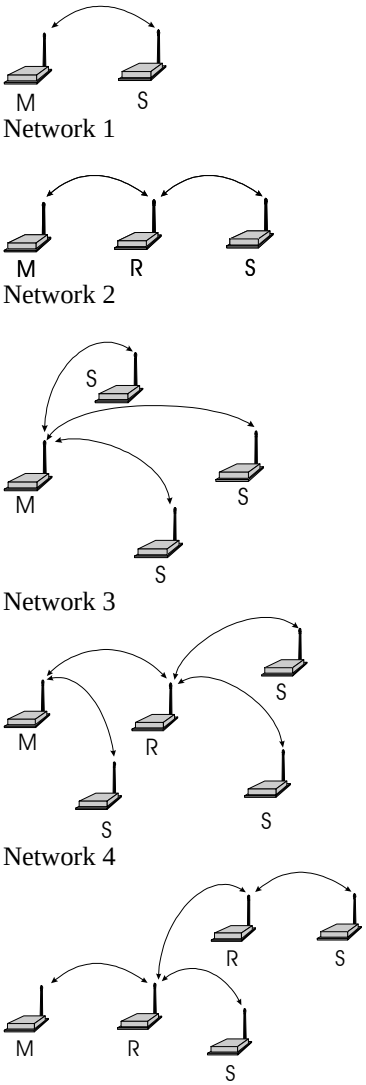

Figure 4 - Sample Network Topologies. Virtually any Combination of Slaves and Repeaters May be Used.

When configured as a Slave, the CompactRF searches for synchronization with a Master. Network topologies consisting of a single *Master* and virtually any combination of *Slaves* and *Repeaters* may be deployed. The functionality of any particular CompactRF™ can be configured as follows:

- **Master Point-to-Point**: The modem is configured to communicate with a single *Slave*, either directly, or through one or more *Repeaters*.
- **Master Point-to-Multipoint**: The modem is configured to communicate with one or more *Slaves* and/or *Repeaters*.
- **Slave**: The modem is configured to communicate with one *Master* either directly or through one or more *Repeaters*..
- **Repeater**: The modem is configured to pass information from either a *Master* or another *Repeater* onto subsequent *Repeaters* and/or *Slaves* and vice versa. The *Repeater* also acts as a *Slave* in the sense that, like a *Slave*, it passes information to/from its serial port.

Examples of different network topologies are shown in Figure 4. Network 1 shows Point-to-Point communication between a Master and Slave. Network 2 makes use of a Repeater to communicate with the Slave. Network 3 illustrates a simple Point-to-Multipoint network with no Repeaters. Networks 4 and 5 gives examples of Point-to-Multipoint networks consisting of both Repeaters and Slaves. There is effectively no restriction to the number of Repeaters and Slaves that can be added to a network. As seen in Network 4, a Master can communicate directly with both Slaves and Repeaters.

3.2 Command Mode

The CompactRF firmware has been designed to allow the user to select between two different Command Mode interfaces: Menu Interface; or, AT Command Interface. The menu interface is ideal for applications which involve human configuration of the operating parameters of the modem. The AT Command interface is more suited for direct interface with another microcontroller or for higher level Windows-based software applications. The CompactRF development board is a useful tool for familiarizing yourself with the various operating parameters and user interface. Reference schematics for the development board can be found in Appendix G. To access the CompactRF's command mode using the development board:

1. Insert the module into the socket with the antenna connector towards the edge of the board.
2. Attach the supplied antenna.
3. Connect a straight through serial cable between the DB9 connector and the serial port on your PC
4. Apply power to the development board
5. Run any terminal application program such as Hyperterminal
6. Set the serial port to 9600 baud, 8N1
7. Momentarily press the configure (CFG) button

3.2.1 Menu Interface

At this point, you should see a menu similar to the following appear:

```
Microhard Systems Inc
                        CompactRF Configuration


1) Operating Mode       S101=1 MasterPP 2) Serial Baud Rate     S102=4 9600
3) Network Address      S104=255        4) Unit Address         S105=65535
5) Hopping Pattern      S106=0          6) Encryption Key       S107=65535
7) Output Power Level   S108=0 1 mW     8) Retry Limit          S213=255
9) Hop Interval         S109=20 x 0.74 ms = 14 ms
D) Autoanswer           S0=1            E) Interface            S6=0 AT style
A) Handshaking          &K3 Enabled     N) DTR &D0 Ignored
O) DSR &S0 ON in Data Mode              M) DCD &C1 ON when sync'd
 S2=43 S3=13 S4=10 S5=8
Type AT for AT interface or hit Enter for menu
```

You now have the option of choosing between the menu interface, or the AT Command interface.

For menu operation, hit ENTER. You should see the following prompt:

```
Enter Command :
```

Now, the CompactRF will respond to your menu selection. For example, to change the unit's Operating Mode, press the 1 key. The following sub-menu will appear:

```
Operating Mode
* 1) MasterPP
  2) SlavePP
ESC to exit
Select Operating Mode :
```

Menu selections are immediately stored to the module's non-volatile memory.

The instant a selection is made, it is immediately stored into the module's non-volatile memory.

3.2.2 AT Command Interface

The CompactRF may also be controlled through an AT Command line interface, using a command set which is very similar to a traditional Hayes telephone modem command set.

For AT Command operation, instead of hitting ENTER at the prompt, type AT <ENTER>. The characters 'AT' are known as the attention characters and must be typed at the beginning of each command line. The modem should respond with OK. Illustrating the same example as above to configure the Operating Mode using AT Commands, type the following:

ATS101=2 <ENTER>

The modem should respond with 'OK.' The above command will set the operating mode to SlavePP (Slave Point to Point).

When using AT Commands, use the &W command to store the most current settings to memory.

With AT Commands, the settings are not immediately stored to non-volatile memory, therefore if the modem is powered down at this point, the Operating Mode would revert to its previous value. To store any recently updated command registers, the following "write" command must be entered.

AT&W <ENTER>

3.3 Switching Between Command and Data Modes

The method for switching between data and command modes depends on which interface you are using (Menu or AT). There is a parameter called "Interface" (Menu item E) which defines whether the modem is currently operating in AT mode or Menu mode.

3.3.1 Switching Between AT Command Interface and Data Mode

Your modem must be in Command Mode for it to execute a command. If you send characters when the modem is in Data Mode, the modem transmits the characters over the air.

Depending on its settings, the modem will either power up in Command Mode or Data Mode. Normally, when first received from the factory, the unit will power up in Command Mode. In this mode of operation, the module "autobauds," meaning that it will adapt to the baud rate of the DTE equipment to which it is connected. Therefore, when in Command Mode, you may change the baud rate of your equipment, and the CompactRF will automatically adjust to this baud rate once an AT string is issued. The new baud rate is stored in register S102. Several baud rates ranging from 2400 to 19200 may be selected.

You can place the modem into Data Mode either by:

- Issuing the answer command (ATA <ENTER>); or,
- Issuing the online command (ATO <ENTER>).

The modem will now attempt to communicate with other CompactRF modules. While in Data Mode, the modem will communicate through the serial port at the same baud rate as was last used in Command Mode[2].

To return to Command Mode, you can either:

- Send the escape sequence. (The escape sequence consists of 1 second of inactivity, followed by the characters '+++' followed by another second of inactivity.); or,
- Toggle the DTR line (depending on the &D parameter see pg 11).

The escape sequence will not be accepted unless both the CompactRF™ and the terminal are set to the same baud rate

The escape sequence must be issued at the baud rate that the modem has been set to. If the modem is set to 19200 baud, and the escape sequence is issued at 9600 baud, for example, the modem will not recognize it, and will not go into Command Mode.

3.3.2 Switching Between Menu Interface and Data Mode

When configured for Menu Interface operation, the CompactRF may be placed into Command Mode from Data Mode by momentarily asserting the **\Config** line. This line runs out to a pushbutton on the development board. Press this button and wait for the menu interface to appear on the screen. The terminal must be set to 9600 baud when using the menu interface.

To switch back to Data Mode, from the main menu, hit the ESC key. You should see the response "Running..." The modem will run in Data Mode at the baud rate setting defined by Menu Item *2) Serial Baud Rate*.

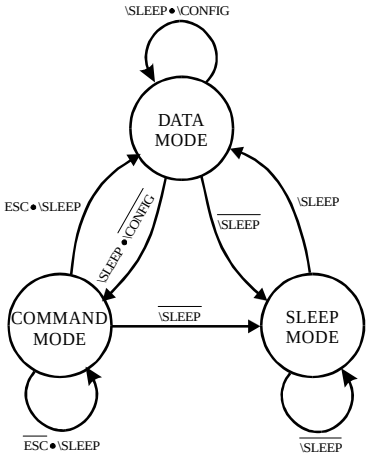

Figure 5a - Menu Interface State Diagram

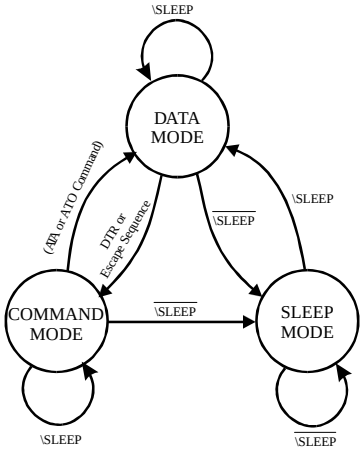

Figure 5b - AT Interface State Diagram

3.4 Sleep Mode

As mentioned at the beginning of this chapter, the CompactRF has a sleep mode of operation. Figure 5 is a state diagram representation of the three modes of operation. Figure 5a is the menu interface state diagram, and Figure 5b is the AT interface state diagram. The CompactRF enters into Sleep Mode when \SLEEP is asserted (active low). The module remains in Sleep Mode until this line is deasserted. See Chapter 2 for timing information. When in Sleep Mode, the module drives all outputs pins (Pins 6-11,23-25,27) at their inactive levels.

---

[2] It is possible to enter into Data Mode at a different baud rate from what is currently being used in Command Mode by issuing the command ATS102=x, where x is one of the valid baud rates. Care must be taken when setting the baud rate in this manner. If you issue another AT string after attempting to set the baud rate using ATS102 <ENTER>, the modem will again autobaud and automatically revert to the baud rate of the host equipment. For example, if your equipment is running at 9600 baud and you wish to set up the modem to run at 19200 baud, the following command line entry would achieve this:

ATS102=2&WA <ENTER>

The first part (S102=2) sets the baud rate to 19200. The next characters (&W) write this baud rate to memory. The last character (A) puts the modem into Data Mode. Once in Data Mode, the modem is unable to autobaud, and is fixed at 19200 baud. By combining several commands into one command line entry, and then immediately putting the modem online, the modem is not given a chance to autobaud back to 9600.

4. Configuration

This chapter provides a detailed description of the various operating parameters of the CompactRF. Section 4.1 provides a quick-start approach which outlines the minimum requirements for establishing communication between two CompactRF modules. The settings will not necessarily provide optimal performance for your application, but will verify that the modules are functioning correctly.

Section 4.2 describes the AT Command interface. Section 4.3 describes the set of registers which are unique to AT operation, and not used in menu mode.

Section 4.4 covers all parameters that are common to both the AT Command interface and the Menu interface.

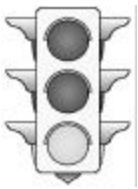

4.1 Quick Start Approach

Whether you are using the AT Command interface or the Menu interface, there are several parameters that must be set in order to establish communication between a pair of CompactRF modules.

The CompactRF™ is equipped with four standard factory default settings. Instead of manually configuring each individual operating parameter, a global command may be used to quickly configure the modem for a particular type of operation. For example, to quickly implement Network 1, Factory default 1 would be applied to the Master, and Factory default 2 would be applied to the Slave. To quickly set up Network 2, apply Factory 1 to the Master, Factory 3 to the Repeater, and Factory 4 to the Slave. *These defaults will get you started and only ensure that a link can be established, but do not necessarily provide the best performance*. Optimization of the communications link is discussed in later sections.

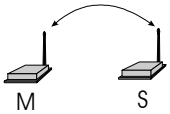

Network 1

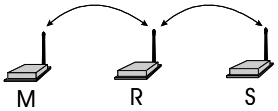

Network 2

Figure 6. Basic Networks

To implement the basic network illustrated in Figure 6, Network 1,

Using AT Commands	Using Menu Interface
Connect a straight-through serial cable between the development board and the terminal	
Connect an antenna to the module	
Power up the development board	

See Section 3.3 If you have problems getting into Command Mode.
Configure the unit to Factory Setting 1 by typing AT&F1 <return>. This puts the unit into Master Point-to-point mode.
Store these settings to memory by typing AT&W <return>.
	Configure the unit to Factory Setting 1 by selecting menu option F). You should see the following:
	`Factory Settings`
	`  1) Factory Master`
	`  2) Factory Slave`
	`  3) Factory Slave Through Repeater`
	`  4) Factory Repeater`
	`* 5) Manual`
	Select menu item 1)

Put the modem into Data Mode by typing ATA (or ATO) <return>	Put the modem into Data Mode by pressing the ESC key.
Perform above steps for the second unit, using Factory Setting 2 instead of Factory Setting 1. This will configure the second unit as a Slave.	

The units should now be communicating. Remember, the parameters defined by Factory Settings 1 and 2 will likely not be the most ideal for your application, but will quickly allow you to test the units. A complete summary of the settings defined by all four factory settings can be found in Appendix C. Factory Default Settings.

Settings are not immediately stored in non-volatile memory when using AT Commands, therefore, the command &W is issued to store the current configuration into non-volatile memory. Settings are retained even after powering down. All user selectable parameters for the CompactRF™ are described in detail in Section 4.4: Configuration Settings.

Checking the Link

To check if the units are communicating, observe the LED indicators on the development board. If the link is good, up to three RSSI LED's on the Master and Slave modems should be active; and if the link is absent (due to a fault at one end or another, such as misconfiguration), the LED's will be in either "scanning mode" or inactive.

Characters typed at the Master terminal should appear at the Slave's terminal, and vice versa. Also, verify that the RX LED blinks as packets of data are received at the Master modem. As data is sent from Slave to Master, the RX indicator should blink on as correct packets of data are received. It is recommended that if the CompactRF™ will be deployed in the field where large distances separate the units, the modems should be configured and tested in close proximity (*e.g.*, in the same room) first to ensure a good link can be established and settings are correct. This will facilitate troubleshooting, should problems arise.

4.2 AT Commands

Several AT Commands are supported by the CompactRF™. The commands discussed in this section do not have a menu interface equivalent. More commands and S-Register settings are discussed in Sections 4.3 and 4.4.

To make the command line more readable, you can insert as many spaces as desired. The command line holds up to 16 characters, not including the AT prefix. If you want to send more than one command line, wait for a response before entering the AT prefix at the start of the next command line.

To re-execute the previous command, enter A/. The modem will execute the previous command line.

When in Command Mode, the modem "autobauds", meaning that it will automatically adjust to the baud rate of the terminal. You may change the terminal baud rate while in Command Mode without losing communication with the modem.

For the AT command protocol, an escape sequence consists of three consecutive escape codes preceded and followed by at least 1 second of inactivity. Typically, the '+' character is used as the escape code.

+++ preceded and followed by 1 second of inactivity

Note that the terminal must be configured to the same baud rate as the modem in order for the modem to recognize the escape sequence. The modem is unable to "autobaud" while in Data Mode.

The following is a description of all available commands. '*' denotes standard factory settings. All of the following commands must be preceded by "AT".

A Answer

The A command causes the modem to attempt to connect with another remote modem (Type ATA <return>).

E Command Echo

Your modem is preset to return (or echo) commands to the host microprocessor when in Command Mode.

E0	No Command Echo
***E1**	Command Echo

I Identification

The I command returns various modem information settings.

I0	Product Code (CompactRF)
I2	Issue ROM Check (OK or ERROR)
I3	Product Identification (Firmware Version)
I4	Firmware Date
I5	Firmware Copyright
I6	Firmware Time

O On-line Mode

The O command attempts to put the modem online and communicate with a remote modem.

Q Quiet Mode

Your modem is preset to send responses when it executes commands, and there after to keep the host informed of its status.

***Q0**	Enable modem responses
Q1	Disable modem responses

V Result Codes display

Your modem can either display result codes as words or numbers.

V0	Display Result Codes as numbers
***V1**	Display Result Codes as words

W Connection Result

This parameter determines the modem response at the transition from Data Mode to Command Mode

***W0**	Reports computer (DTE) baud rate as CONNECT xxxx
W1	Reports wireless rate between modems as CARRIER xxxx.
W2	Reports modem (DCE) baud rate as CONNECT xxxx

Z Reset and load stored configuration

The Z command resets the modem and loads the stored configuration.

&V View Configuration

The &V command displays all S registers and their current values.

&E Framing Error Check NOT YET IMPLEMENTED

This command enables or disables Framing Error Check. When enabled, the modem looks for the stop bit. If the stop bit is absent, the byte is thrown out. When enabled, the modem also does a parity check. Note that the data format (number of data bits, parity type, and number of stop bits) is defined by S register 110.

***&E0**	Disable Framing Error Check
&E1	Enable Framing Error Check

&W Write Configuration to Memory

The &W command stores the active configuration into the modem's non-volatile memory.

Sxxx? Read S register value

This command causes the modem to display the current setting of S register xxx.

Sxxx=yyy Set S register value (see section 3.3 S-Registers)

This command sets the specified S register to a value specified by yyy.

AT Command Result Codes

The CompactRF™ module can either display the results of a command as either text strings or numerical data. The following chart shows resulting text string and corresponding numeric result.

0	OK
3	NO CARRIER
4	ERROR
7	CONNECT 2400
8	CONNECT 3600
9	CONNECT 4800
10	CONNECT 7200
12	CONNECT 9600
13	CONNECT 14400
14	CONNECT 19200
15	CONNECT 28800
17	CONNECT 38400
18	CONNECT 57600
33	CONNECT 115200
62	CARRIER 45000
64	CARRIER 20000

4.3 AT Registers

The parameters described in this section apply to AT Command operation only.

S Register 0 - Auto Answer

If this register is set to zero, the modem will power up in command mode. If this register is non-zero, the modem will power up in data mode.

S Registers 2 through 5 cannot be stored to non-volatile memory.

S Register 2 - Escape Code

This register contains the ASCII value of the escape character.

The default value (decimal 43) is equivalent to the ASCII character '+'. Values greater than 127 disable the escape feature and prevent you from returning to the Command Mode. This register cannot be stored to non-volatile memory. If the modem is reset, or powered down, the default value is restored.

Default is '+' (decimal 43).

S Register 3 - CR Control Code

This register contains the ASCII value of the carriage return character.

This is the character that is used to end the command line and is also the character that appears after the modem sends a response. This register cannot be stored to non-volatile memory. If the modem is reset, or powered down, the default value is restored.

Default is 'CR' (decimal 13).

S Register 4 - Linefeed Control Code

Register S4 sets the ASCII value of the linefeed character.

The modem sends the linefeed character after sending a carriage return character when sending text responses. This register cannot be stored to non-volatile memory. If the modem is reset, or powered down, the default value is restored.

Default is 'LF' (decimal 10).

S Register 5 - Backspace Control Code

Register S5 sets the ASCII value of the backspace character.

This character is both the character created by entering BACKSPACE and the character echoed to move the cursor to the left. This register cannot be stored to non-volatile memory. If the modem is reset, or powered down, the default value is restored.

Default is 'BS' (decimal 8).

4.4 Configuration Settings

The parameters described in this section affect the operating characteristics of the CompactRF module. All the settings described in this section can be configured using either the AT Command interface or the menu interface.

	AT	Menu
DCD (Data Carrier Detect)	**&C**	**M**

The &C command controls the modem's DCD output signal to the host microprocessor. This command determines when the DCD is active.

&C0 DCD is always ON
***&C1** DCD on when modems are synchronized. DCD is always on when unit is configured as Master.
&C2 DCD used for output data framing and Modbus mode. See page 24 for details.

	AT	Menu
DTR (Data Terminal Ready)	**&D**	**N**

The &D command controls what action the modem performs when the DTR input line is toggled. The DTR input is controlled by the host microprocessor.

***&D0** DTR line is ignored
&D1 Not Supported
&D2 DTR disconnects and switches to Command Mode
&D3 DTR disconnects and resets modem. Modem will remain in this state until DTR again goes active.

	AT	Menu
Load Factory Default Configuration	**&F**	**F**

The &F command resets the modem and loads the default factory configuration.

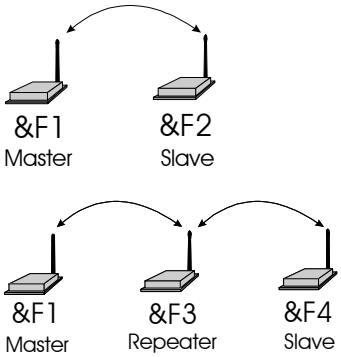

&F1 Master Point-to-Multipoint. Designed to communicate with modems configured as &F2 or &F3.
&F2 Slave. Designed to communicate with another modem configured as &F1.
&F3 Repeater. Designed to communicate with modems configured as &F1 and &F4.
&F4 Slave working with factory default Repeater and factory default Master. Communicates directly with Repeater configured as &F3.

	AT	Menu
Handshaking	**&K**	**A**

This command controls the handshaking between the modem and host microprocessor.

&K0 Disable handshaking
&K2 RTS/CTS input data framing. See page 33 for details.
***&K3** Enable hardware handshaking (RTS/CTS)

	AT	Menu
DSR (Data Set Ready)	**&S**	**O**

This command controls the DSR line for the modem, and determines when it is active

&S0 DSR is always ON
***&S1** DSR is ON in Data Mode, OFF in Command Mode

	AT	Menu
Operating Mode	**S101**	**1**

Only one Master can exist for each network.

The Operating Mode (register S101) partly defines the "personality" of the CompactRF™ module. Allowable settings for this register are 1 through 4 as follows:.

- S101=1 Master Point to Multipoint
- S101=2 Master Point to Point
- S101=3 Slave
- S101=4 Repeater

The default for this register depends on which factory default is selected as shown below:

- Default for Factory Setting &F1 is 1 (Master Point-to-Multipoint)
- Default for Factory Setting &F2 is 3 (Slave)
- Default for Factory Setting &F3 is 4 (Repeater)
- Default for Factory Setting &F4 is 3 (Slave)

1)Master - Point to Multipoint. In any given network, there is always only one Master. All other units should be configured as either Slaves or Repeaters. When defined as a Point-to-Multipoint Master, the modem broadcasts data to all Slaves and Repeaters in the network, and is also the ultimate destination for data transmitted by all Slaves and Repeaters. In addition, the Master defines the following network parameters to be utilized by all other modems in the network (See the appropriate sections for a complete description of these parameters):

- Maximum Packet Size (S112)
- Minimum Packet Size (S111)
- Link Handshaking (S122)
- Wireless Link Rate (S103)
- Hop Interval (S109)

2)Master - Point to Point. This mode of operation is identical to Master Point-to-Multipoint, with the exception that the Master only broadcasts to one particular Slave or Repeater. The modem with which communication occurs is defined by the Unit Address (S105). For example, if a Slave has been assigned Unit Address 100, and the Master wishes to communicate with that Slave, the Master must also be assigned a Unit Address of 100. If there are Repeaters in the network, they will pass the packet through to the Slave, and vice versa. Because Repeaters also have Slave functionality (i.e., a Repeater can be connected to a terminal), the Master can choose to communicate solely with a Repeater. This would be accomplished by assigning the same Unit Address to both the Master and the Repeater.

3)Slave. Up to 65534 Slaves may exist in a network, all of which communicate with the common Master (either directly or via Repeater(s)). Slaves cannot directly communicate with other Slaves, nor can they acknowledge packets of data sent by the Master. Clearly this would cause conflicts when there are multiple Slaves. The Master does, however, send acknowledgements to all messages it receives from Slaves. The Master initiates communications by sending a broadcast message to all Slaves. All Slaves are free to respond in a "Slotted ALOHA" fashion, meaning that each Slave can choose one of several windows in which to transmit. If there happens to be two Slaves attempting to talk at the same time, the Master may not receive the data, and the Slaves therefore would not get an acknowledgement. At this point, the Slaves would attempt to get the information through at random time intervals, thus attempting to avoid any more conflicts. Special parameters which control the Slave's response characteristics can be modified with S Registers S115 and S213.

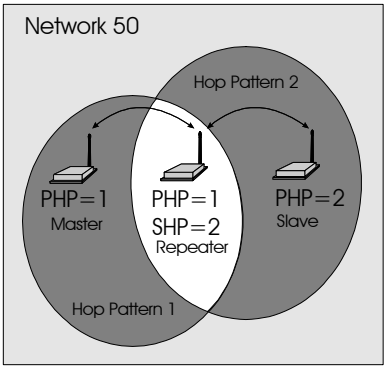

Figure 7 - Repeater Operation

4) Repeater. A more precise title would be Repeater/Slave, because a Repeater also has much of the same functionality as a Slave. A terminal can be connected at the Repeater location and communicate with the Master terminal. There is no restriction to the number of Repeaters in a network, allowing for communication over virtually limitless distances. The presence of one Repeater in a network automatically degrades system throughput by half. Additional Repeaters, regardless of the quantity, do not diminish system throughput any further. To understand Repeater operation, consider the module as belonging to two hopping patterns at the same time: The Primary Hopping Pattern and the Secondary Hopping Pattern. In Figure 7, the Master belongs to Hopping Pattern 1, and communicates with the Repeater on this hopping pattern. The Slave belongs to Hopping Pattern 2, and communicates with the Repeater on this hopping pattern. The whole system belongs to Network 50 (i.e., all units must be assigned the same Network Address (S104), which in this case was selected to be 50. Note that Slaves and Master only communicate on their respective Primary Hopping Pattern. Repeaters communicate on the Primary Hopping Pattern when communicating with the Master (or with another Repeater between itself and the Master). Repeaters communicate on their Secondary Hopping Pattern when communicating with Slaves (or with another Repeater between itself and the Slaves). Figure 8 shows another example.

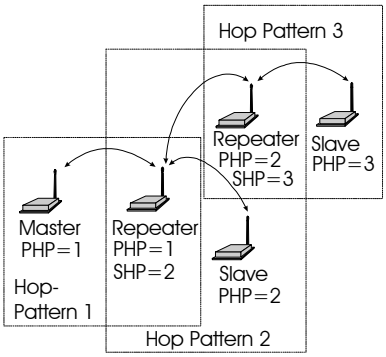

Figure 8 - A Network Utilizing Three Hopping Patterns

If the Repeater is not also being used as a Slave (there is no DTE connected to the serial port), it is recommended that the Repeater's baud rate be set to 115K, and that handshaking be disabled (&K0). This will help ensure a smooth flow of data through the network.

If there is no DTE connected to the Repeater, turn off handshaking (&K0) and set the baud rate to 115K.

	AT	Menu
Serial Baud Rate	**S101**	**1**

The Serial Baud Rate is the current speed that the modem is using to communicate with the DTE. When the AT command prefix is issued, the modem performs an 'autobaud' operation and determines what the current DTE baud rate is set to. The S register value returns the current setting of the DTE baud rate.

The possible values are:

*** 1**	**115200**
2	57600
3	38400
4	28800
5	19200
6	14400
7	9600
8	7200
9	4800
10	3600
11	2400

It is generally advisable to choose the highest rate that your terminal equipment will handle to maximize performance, unless a limitation on the available bandwidth is desired. If the DTE is a personal computer, the port can usually be used reliably at 115200.

The Master determines the Wireless Link Rate. This setting on all other modems is ignored..

Select a Network Address and assign it to all units which will be included in the network.

	AT	Menu
Network Address	**S104**	**3**

The Network Address defines the communications network to which individual units can be a part of. By establishing a network under a common Network Address, the network can be isolated from any other concurrently operating network. As well, the Network Address provides a measure of privacy and security. Only those units which are members of the network will participate in the communications interchange. Valid values for the Network Address range from 0 to 65535, inclusive.

To enhance privacy and reliability of communications where multiple networks may operate concurrently in close proximity, it is suggested that an atypical value be chosen – perhaps something meaningful yet not easily selected by chance or coincidence.

Default is 1.

Use the same Unit Address on both units for point-to-point mode. In multipoint mode, set each Slave and Repeater to a different Unit Address.

Valid Unit Addresses are 1 to 65535.

	AT	Menu
Unit Address	**S105**	**4**

In point-to-point operation, the Unit Address on both the Master and Slave (or Repeater) units must be the same. In a multipoint system, the Unit Address uniquely identifies each Slave and Repeater from one another. Each unit in a multipoint system must have a unique Unit Address ranging from 1 to 65535. Do not use 0 as a Unit Address, and do not use a Unit Address more than once within the same Network. This is required because the Master must be able to acknowledge each unit individually, based on the Unit Address.

	AT	Menu
Primary Hopping Pattern	**S106**	**5**
Secondary Hopping Pattern	**S206**	**B**

Since the CompactRF™ is a frequency-hopping modem, the carrier frequency changes periodically according to one of 30 pseudo-random patterns, defined by the Primary and Secondary Hopping Patterns. Valid entries for each are 0 through 29.

The concept of Primary and Secondary Hopping Patterns was introduced in the discussion of S Register 101 (Operating Mode).

Using the designations M[a,] Rx[a,b] and Sx[a] where:
- *M* indicates Master;
- *R* indicates Repeater;
- *S* indicates Slave;
- *x* is the Unit Address;
- *a* is the primary hopping pattern; and,
- *b* is the secondary hopping pattern;

the following diagrams illustrate the methodology for deploying simple to complicated networks:

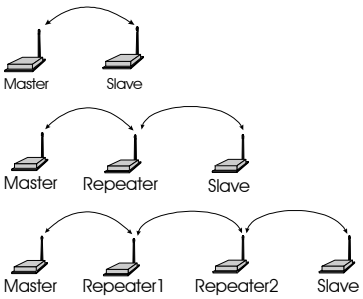

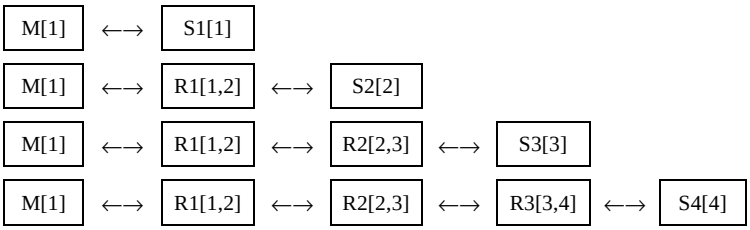

It is reasonable to consider a Repeater as being both a Slave and a Master, alternating between Primary and Secondary Hopping Patterns as the unit changes channel. Consider R1 in the illustration below. When communicating with the Master, R1 is acting like a Slave on Primary Hopping Pattern 1. When communicating with R2 and S4, R1 is acting like a Master on Secondary Hopping Pattern 2. If multiple Repeaters are used, they should have different Secondary Hopping Patterns:

Slaves and Masters do not use Secondary Hopping Patterns

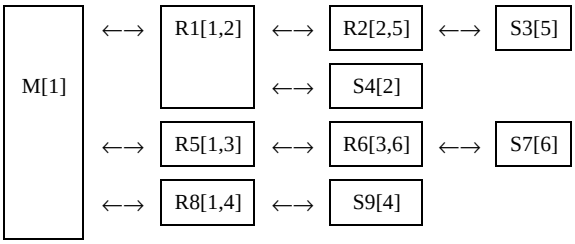

Note that all units have a unique Unit Address.

Networks of any complexity can be created by linking multiple Repeaters and Slaves:

Remember to assign a unique Unit Address (1 to 65535) to each unit in the system

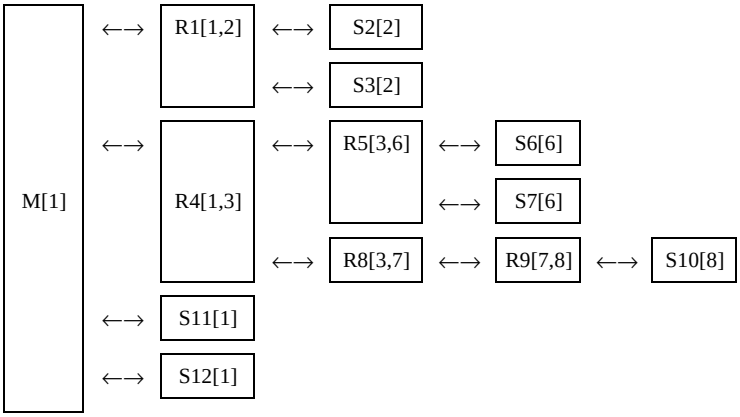

With a limitation of 62 hopping patterns, one might suspect that there is a limitation to the number of repeaters in a system. However, if the units are far enough away from one another, hopping patterns may be reused in different sections of the network, without causing interference.

All units within a network must use the same encryption key.

	AT	Menu
Encryption Key	**S107**	**6**

The Encryption Key provides a measure of security and privacy of communications by rendering the transmitted data useless without the correct key on the receiver. Valid Encryption Keys range from 0 to 65535.

Keep in mind that all units within the network must use the same key for communications to succeed.

	AT	Menu
Output Power Level	**S108**	**7**

The Output Power Level determines at what power the CompactRF™ transmits. The CompactRF™ can operate with very low power levels, so it is recommended that the lowest power necessary is used; using excessive power contributes to unnecessary "RF pollution".

The allowable settings are:

0	1 mW
1	10 mW
***2**	**100 mW**
3	1000 mW

Ideally, you should test the communications performance between units starting from a low power level and working upward until the RSSI is sufficiently high and a reliable link is established. Although the conditions will vary widely between applications, typical uses for each setting are described below:

Power	Use
1 mW	For in-building use, typically provides a link up to 300 feet on the same floor or up/down a level. Outdoors, distances of 1 km can be achieved if high-gain (directional) antennas are placed high above ground level and are in direct line-of-sight.
10 mW	200-500 ft indoors, 2-5 km outdoors.
100 mW	400-800 ft indoors, 4-8 km outdoors.
1000 mW (1 W)	Typically provides communications up to a distance of 1000 feet or more in-building on the same floor or up/down a few levels, depending on building construction (wood, concrete, steel, etc.). In ideal line-of-sight conditions, up to 16 km or more can be achieved. Note that only an antenna with a gain of no more 6 dBi may be used. Any higher is a violation of FCC rules. See IMPORTANT warning below.

FCC Regulations

IMPORTANT:

FCC Regulations allow up to 36 dBi effective radiated power (ERP). Therefore, the sum of the transmitted power (in dBm), the cabling loss and the antenna gain cannot exceed 36 dBi.

1 mW = 0 dBm

10 mW = 10 dBm

100 mW = 20 dBm

1000 mW = 30 dBm

For example, when transmitting 1 Watt (30 dBm), with cabling losses of 2 dB, the antenna gain cannot exceed 36 - 30 + 2 = 8 dBi. If an antenna with a gain higher than 8 dBi were to be used, the power setting must be adjusted appropriately.

The hopping interval is controlled by the master. The slave and repeater units will use the hopping interval setting from the master.

	AT	Menu
Hopping Interval	**S109**	**9**

This option determines the frequency at which the modems change channel. Note that the Master controls this parameter for the entire network. This setting is ignored in units configured as Slaves or Repeaters.

The allowable settings are 20 to 255. There is a multiplying factor of 0.74ms. For example, if you set the Hopping Interval to 20, the actual hopping interval will be 20 x 0.74ms = 14.8ms.

See Appendix D for optimal Hopping Interval settings in relation to packet size and link rate.

	AT	Menu
Data Format	**S110**	**C**

This register determines the format of the data on the serial port. Allowable settings are:

***1**	**8 bits, No Parity, 1 Stop**
2	8 bits, No Parity, 2 Stop
3	8 bits, Even Parity, 1 Stop
4	8 bits, Odd Parity, 1 Stop
5	7 bits, No Parity, 1 Stop
6	7 bits, No Parity, 2 Stop
7	7 bits, Even Parity, 1 Stop
8	7 bits, Odd Parity, 1 Stop
9	7 bits, Even Parity, 2 Stop
10	7 bits, Odd Parity, 2 Stop
11	9 bits, No Parity, 1 Stop

	AT	Menu
Packet Minimum Size	**S111**	**G**
Packet Maximum Size	**S112**	**H**
Packet Character Timeout	**S116**	**I**

These settings determine the conditions under which the modem will transmit accumulated data over the air.

S Register 111 - Minimum Size

Valid entries for this register are 1 to 255 bytes, which defines the minimum number of bytes to receive from the DTE before encapsulating them in a packet and transmitting over the air.

The Minimum and Maximum Packet Size is controlled by the Master. The Slave and Repeater units will use the Minimum and Maximum Packet Size setting from the Master.

Note that the minimum packet size for all modems in the network is determined by the Master only. This setting is ignored in all Slave and Repeater modems. The default is 1 byte.

S Register 112 - Maximum Size

This setting has a range of 2 to 255, and defines the maximum number of bytes from the DTE which should be encapsulated in a packet. This value should be greater than the minimum packet size, but not smaller than is necessary for reliable communications. If the wireless link is consistently good and solid, a maximum size of 255 will yield the best throughput (depending on the higher level protocols of the connected equipment). However, if the link is poor (*e.g.*, experiencing excessive interference) and data is frequently retransmitted, the maximum packet size should be reduced. This decreases the probability of errors within packets, and reduces the amount of traffic in the event that retransmissions are required.

Note that the maximum packet size for all modems in the network is determined by the Master only. This setting is ignored in all Slave and Repeater modems. The default is 255 bytes.

S Register 116 - Packet Character Timeout

This register has valid entries of 0 to 254 milliseconds. The Packet Character Timeout timer looks for gaps in the data being received from the DTE. The timer is only activated after the Minimum Packet Size has been accumulated in the modem. After which, if the timer detects a gap in the data exceeding the Packet Character Timeout value, the modem will transmit the data.

The CompactRF™ will accumulate data in its buffers from the DTE until one of the following requirements is met (whichever occurs first):

- The Maximum Packet Size (in bytes) has been accumulated;
- The Minimum Packet Size has been accumulated AND the Packet Character Timeout interval has elapsed.

The default for the Packet Character Timeout is 9 ms. If set to 0 ms, the unit will buffer exactly the minimum packet size before transmitting.

	AT	Menu
Packet Retransmissions	**S113**	**J**

This register applies to both Master and Repeater operation. It does not apply to Slave operation. The Master will retransmit each data packet exactly the number of times defined by the Packet Retransmissions parameter. The Master retransmits once at the beginning of each hopping interval until the limit is reached. This parameter is not necessary in Slave units since all Slaves receive acknowledgement from the Master. As discussed previously, the Repeater effectively behaves as both a Master and a Slave. When the Repeater is tuned to its Secondary Hopping Pattern (acting as a Master), the Packet Retransmissions Parameter comes into play. The Repeater will re-send packets of data on to Slaves or other Repeaters exactly the number of times defined by the Packet Retransmissions parameter.

Recipients of the packet will discard any duplicates The valid settings for this parameter are 0 to 255 retransmissions. The default is 2.

	AT	Menu
Packet Retry Limit	**S213**	**K**

Packet Retry Limit is analogous to Packet Retransmissions, but specifically applies to Slaves and Repeaters. This parameter is not used by the Master. Because the Slave has the advantage of receiving acknowledgements from the Master, it is not necessary to blindly retransmit each packet. If the Slave does not get an acknowledgement on the next hop, it will retransmit its packet. This will continue until the Packet Retry Limit is reached or an acknowledgement is received. If the limit is reached, the modem will give up and discard the data. Valid settings are 0 to 255 retries. The default value is 2.

The Repeater makes use of this parameter when it is tuned to its Primary Hopping Pattern and is acting like a Slave.

	AT	Menu
Packet Repeat Interval	**S115**	**L**

A parameter that is specific to Slaves and Repeaters is the Packet Repeat Interval.

The allowable settings are 1 through 255. The default is 1.

This parameter defines a range of random numbers that the Slave will use as the next slot in which it will attempt to send the packet. For example, if this register is set to 7, the Slave will choose a number between one and seven as the next slot in which to transmit. Suppose the random number generator picks 5, then the Slave will transmit in the fifth time slot. A Slave will transmit a maximum of once per hopping interval, however, depending on the duration of the hopping interval and the maximum packet size, more than one slot per hop is potentially available. The Slave will transmit more frequently when a Repeat Interval with a smaller range is selected. Choose 1 to have the Slave transmit in the first available slot. Choose higher intervals for less frequent transmission, or to avoid collisions between many Slaves in the system.

	AT	Menu
Link Handshaking	**S122**	**P**

Link Handshaking is controlled only by the Master unit. If the Master runs out of free buffers, it will command all Slaves and Repeaters to hold their data. Once the Master is ready to receive data it will allow the Slaves and Repeaters to transmit. Possible values are '1' - Enabled and '0' - Disabled. The default is 1. This register is ignored by all Slave and Repeater units.

	AT	Menu
Modbus Mode	**S117**	**Q**

Modbus Mode allows for the CompactRF™ to be fully Modbus compatible. Please contact Microhard Systems for assistance when configuring the unit for Modbus operation. Optimal Modbus settings rely on several other S Register parameters.

The allowable settings for this register are:

***0**	**Disabled**
1	Enabled

	AT	Menu
RTS/DCD Framing	**120**	**R**
DCD Timeout	**121**	**S**

The CompactRF™ supports two special types of data framing:

- Input (or RTS/CTS) Data Framing; and,
- Output (or DCD) Data Framing

Input Data Framing is enabled by configuring the Handshaking Parameter as &K2. This type of framing makes use of the S120 parameter as illustrated in Figure 9. Parameter S120 can be set to any value between 0 and 254 ms.

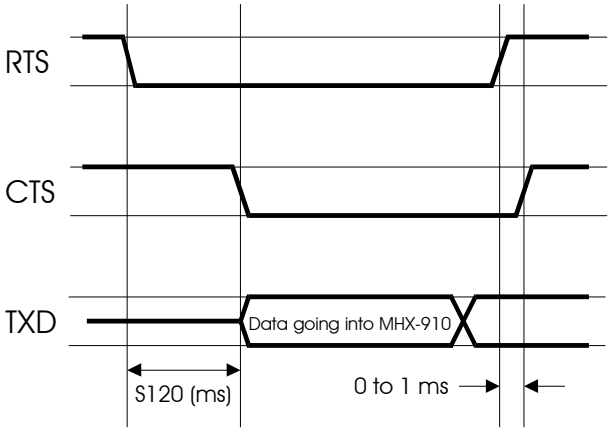

Figure 9 - Input Data Framing

To enable output (DCD) data framing, set the Data Carrier Detect parameter as &C2. This type of framing uses both S120 and S121 registers as shown in Figure 10. Valid ranges for each parameter are 0 to 254 ms.

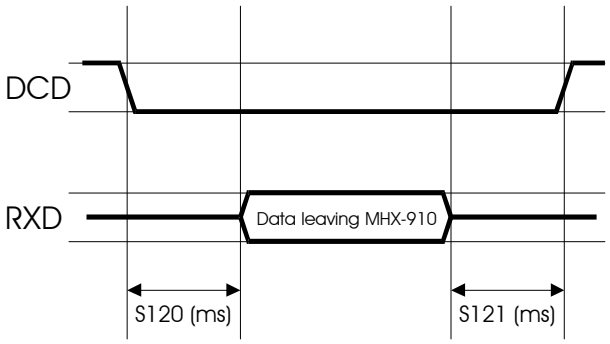

Figure 10 - Output Data Framing

	AT	Menu
RSSI Reading	**S123**	**T**

This register displays the average signal strength in dBm over the previous four hop intervals. Valid RSSI readings apply only to units configured as Slave or Repeater.

5. Installation

The installation, removal or maintenance of all antenna components must be carried out by qualified and experienced professionals.

The installation, removal or maintenance of all antenna components must be carried out by qualified and experienced professionals.

The CompactRF complies with FCC part 15 at the modular level for operation in the license-free 902-928 MHz ISM band. This chapter provides guidelines for installing and deploying equipment which incorporates the CompactRF module.

5.1 Estimating the Gain Margin

Successful communication between CompactRF modules is dependent on three main factors:

- System Gain
- Path Loss
- Interference

System gain is a calculation in dB describing the performance to be expected between a transmitter-receiver pair. The number can be calculated based on knowledge of the equipment being deployed. The following four factors make up a system gain calculation:

1. Transmitter power (user selectable 0, 10, 20 or 30 dBm)
2. Transmitter gain (transmitting antenna gain minus cabling loss between the transmitting antenna and the CompactRF module)
3. Receiver gain (Receiving antenna gain minus cabling loss between the receiving antenna and the module)
4. Receiver sensitivity (Specified as -103 dBm on the CompactRF module)

In the following illustration, the transmitting antenna has a gain of 6 dB, and the receiving antenna has a gain of 3 dB. The cable loss between the module and the antenna is 2 dB on both the transmitting and receiving side.

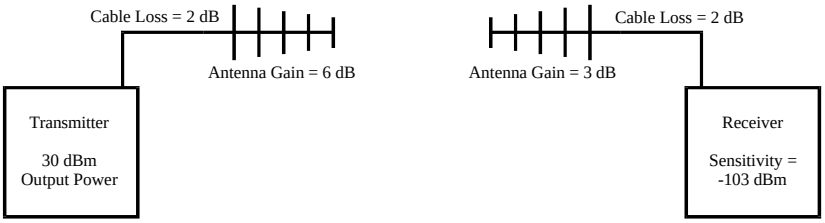

The power level has been set to 30 dBm (1W) on the transmitter, and the receiver sensitivity for the CompactRF is -103 dBm.

System gain would be calculated to be:

30 - 2 + 6 + 3 - 2 + 103 = 138 dB.

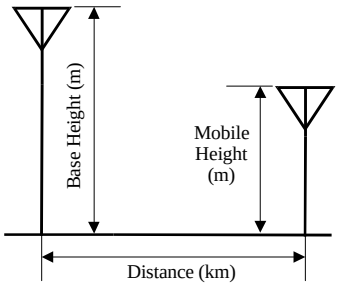

When deploying your system, care must be taken to ensure the **path loss** (reduction of signal strength from transmitter to receiver in dB) between equipment does not exceed the system gain (138 dB in the above example). It is recommended to design for a **gain margin** of at least 10 dB to ensure reliable communication. Gain margin is the difference between system gain and path loss. Referring to the same example, if the path loss is 100 dB, the gain margin would be 38 dB, which is more than adequate for reliable communication.

Path loss is a very complicated calculation which mainly depends on the terrain profile, and the height of the antennas off the ground.

The following table provides path loss numbers for varying antenna heights and antenna separation: These numbers are real averages taken from rural environments. They do not apply to urban, non-line-of-sight environments.

Distance (km)	**Base Height (m)**	**Mobile Height (m)**	**Path Loss (dB)**
5	15	2.5	116.5
5	30	2.5	110.9
8	15	2.5	124.1
8	15	5	117.7
8	15	10	105
16	15	2.5	135.3
16	15	5	128.9
16	15	10	116.2
16	30	10	109.6
16	30	5	122.4
16	30	2.5	128.8

Once the equipment is deployed, you can verify the signal strength by entering into Command Mode and reading Register S123. This register provides the average signal strength in dBm. The minimum strength for communication is roughly -103 dBm. For consistent reliable communication, you should try to deploy the equipment such that signal strength exceeds -95 dBm.

5.2 Antennas and Cabling

This section describes the recommended procedure for installing cabling and antennas for use with the CompactRF module.

5.2.1 Internal Cabling

The most common method for installing the module is to run a cable from the module's SMA connector to an N-male bulkhead connector on the chassis of the equipment as shown in Figure 11

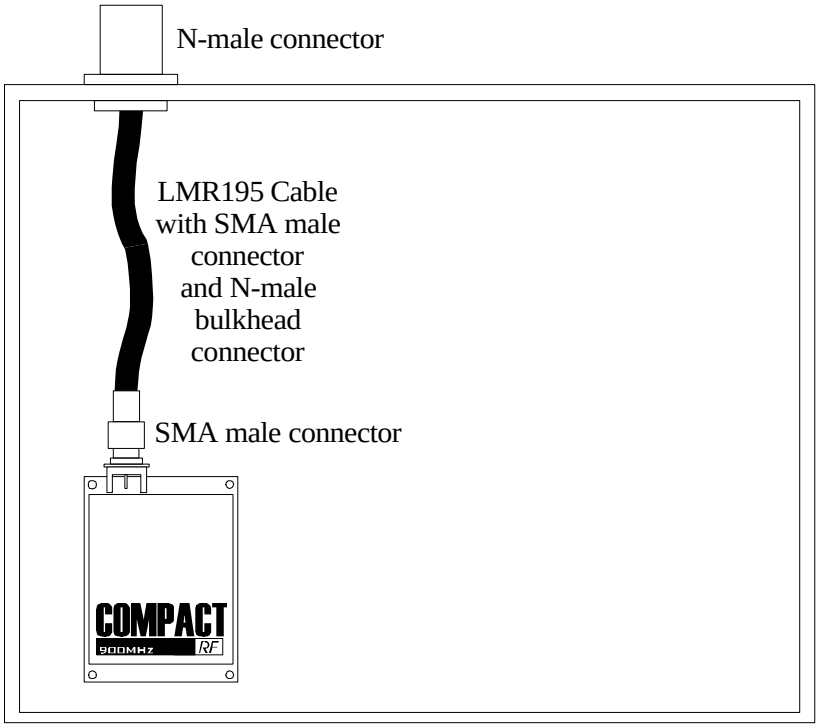

Figure 11. Suggested Internal Cabling

With losses of 10.7 dB/100ft, LMR195 is a high quality cable ideal for use with the CompactRF's SMA connector. Losses are negligible for the short piece used within the chassis. Additional losses up to 0.5 dB may be present in the SMA and N connections.

5.2.2 Installing External Cables, Antennas and Lightning Arrestors

The installation, removal or maintenance of all antenna components must be carried out by qualified and experienced professionals.

The installation, removal or maintenance of** all **antenna components must be carried out by qualified and experienced professionals.

Never work on an antenna system when there is lightning in the area.

Never work on an antenna system when there is lightning in the area.

Direct human contact with the antenna is potentially unhealthy when the CompactRF is generating RF energy. Always ensure that the CompactRF equipment is powered down during installation.

*Direct human contact with the antenna is potentially unhealthy when the CompactRF is generating RF energy. Always ensure that the CompactRF equipment is powered down during installation.**s***

Surge Arrestors

The most effective protection against lightning is to install two lightning (surge) arrestors. One at the antenna, and the other at the interface with the equipment. The surge arrestor grounding system should be fully interconnected with the transmission tower and power grounding systems to form a single, fully integrated ground circuit. Typically, both ports on surge arrestors are N-female.

Cabling

The following coax cables are recommended:

Cable	Loss (dB/100ft)
LMR 195	10.7
LMR 400	3.9
LMR 600	2.5

Factors to take into consideration when choosing a cable are:

- price;
- bend radius limitations (the lower performance cables generally can bend more sharply)
- performance requirements; and,
- distance between the equipment and the antenna.

When installing the cable, always begin fastening at the top near the antenna connector/surge arrestor. The cable must be supported at the top with a hose clamp or wrap lock, and at 5 ft intervals down the length of the tower. Over-tightening the fasteners will dent the cable and reduce performance. If properly grounded surge arrestors are not installed at both the top and the bottom of the cable, then the cable should be grounded to the tower at these locations using a cable grounding kit. If the tower is non-conductive, then a separate conductor, physically separate from the cable, should be run down the tower.

Antenna

Before choosing an antenna, you should have some knowledge of the path loss and the topology of the equipment. If the equipment is in a fixed location and is to communicate with only one other unit also in a fixed location, then a Yagi antenna is suitable. Choose a Yagi with enough gain to ensure adequate gain margin. When deploying the Yagi, point the antenna towards the intended target, ensuring the antenna elements are perpendicular to the ground.

If the equipment must communicate with multiple or mobile transceivers, then select an Omni-directional antenna with appropriate gain.

The Effective Radiated Power (ERP) emitted from the antenna cannot exceed +36 dBm ERP.

To comply with FCC regulations, you must limit ERP to 36 dBm or less.

With the CompactRF set to full power, ERP is calculated as follows:

ERP = 30 - (Cabling and Connector Losses) + (Antenna Gain) < 36

Use the guidelines in the previous section for calculating cable and connector losses. If cabling and connector losses are 2 dB, then the maximum allowable gain of the antenna will be 8 dB.

External Filter

Although the CompactRF is capable of filtering out RF noise in most environments, there are occasions that require external filtering. Paging towers, and cellular base stations in close proximity to the CompactRF antenna can desensitize the receiver. Microhard Systems' external cavity filter eliminates this problem. The filter has two N-female ports and should be connected in line at the interface to the RF equipment.

Weatherproofing

Type N connectors are not weatherproof. All connectors should be taped with rubber splicing tape (weatherproofing tape), and then coated with a sealant.

A. Modem Command Summary

The following provides a command summary for the CompactRF™. Factory settings are denoted with a '*'.

AT Commands

A	Answer
E	Command Echo
	E0 No Echo
	* E1 Command Echo
I	Identification
	I0 Product Code
	I2 ROM Checksum test
	I3 Firmware Version
	I4 Firmware Date
	I5 Copyright
	I6 Firmware Time
O	On-line Mode
Q	Quiet Mode
	* Q0 Enables Result Codes
	Q1 Disables Result Codes
V	Result Codes Display
	V0 Display as Numbers
	* V1 Display as Words
W	Connection Result
	* W0 Reports DTE as CONNECT xxxx
	W1 Reports computer (DTE) rate and wireless rate between modems as CARRIER xxxx.
	W2 Reports DCE as CONNECT xxxx
Z	Reset and load stored configuration
&C	DCD (Data Carrier Detect)
	&C0 DCD is always on
	* &C1 DCD is on when modems are synchronized
	&C2 DCD used for output data framing
&D	DTR (Data Terminal Ready)
	&D0 DTR ignored
	* &D2 DTR disconnects and switches to command
	&D3 DTR disconnects and resets modem
&F	Load Factory Default
	&F1 Master
	&F2 Slave
	&F3 Repeater
	&F4 Slave through Repeater
&K	Handshaking
	&K0 Disable Handshaking
	&K2 RTS/CTS Input Framing
	* &K3 Enable Handshaking
&S	DSR (Data Set Ready)
	&S0 DSR is always on
	* &S1 DSR on in data, off in command mode
&V	View Configuration
&W	Write configuration to memory
Sxx?	Read S register value
Sxx=yy	Set S register value

Result Codes

0	OK	12	CONNECT 9600
3	NO CARRIER	13	CONNECT 14400
4	ERROR	14	CONNECT 19200
7	CONNECT 2400	15	CONNECT 28800
8	CONNECT 3600	17	CONNECT 38400
9	CONNECT 4800	18	CONNECT 57600
10	CONNECT 7200	33	CONNECT 115200
64	CARRIER 20000	62	CARRIER 45000

S Registers

S0	Auto Answer [0...255]
	0 = power up in Command Mode,
	non-zero = power up in Data Mode
S2	Escape code [0...255] default '+'
S3	CR character [0...255] default <cr>
S4	Line Feed [0...255] default <lf>
S5	Backspace [0...255] default <bs>
S101	Operating Mode
	1 - Master Point to Multipoint
	2 - Master Point to Point
	3 - Slave
	4 - Repeater
S102	Serial Baud Rate
	*1 = 115200, 2 = 57600, 3 = 38400
	4 = 28800, 5 = 19200, 6 = 14400
	7 = 9600, 8 = 7200, 9 = 4800,
	10 = 3600, 11 = 2400
S103	Wireless Link Rate
	2 = Fast w/o FEC
	*4 = Fast with FEC
S104	Network Address [0...65535]
S105	Unit Address [1...65535]
S106	Primary Hopping Pattern [0...61]
S206	Secondary Hopping Pattern [0...61]
S107	Encryption Key [0...65535]
S108	Output Power Level
	0 = 1 mW, 1 = 10 mW, *2 = 100 mW
	3 = 1000 mW
S109	Hopping Interval
	1 = 8 msec, 2 = 12 msec, 3 = 16 msec,
	4 = 20 msec, 5 = 30 msec, 6 = 45 msec,
	7 = 80 msec, *8 = 120 msec
S110	Data Format
	* 1 = 8N1, 2 = 8N2, 3 = 8E1, 4 = 8O1
	5 = 7N1, 6 = 7N2, 7 = 7E1, 8 = 7O1
	9 = 7E2, 10 = 7O2, 11 = 9N1
S111	Packet Minimum Size [1...Maximum Size]
S112	Packet Maximum Size [2...255]
S113	Packet Retransmissions [0...255]
S213	Packet Retry Limit [0...255]
S115	Packet Repeat Interval [1..255]
	Default = 1
S116	Packet Character Timeout [0...254 ms]
S117	Modbus Mode
	*0 = Disabled, 1 = Enabled
S120	RTS/DCD Framing Interval [0...254 ms]
S121	DCD Timeout [0...254 ms]
S122	Link Handshaking [0=Disabled, *1=Enabled]

B. Serial Interface

The CompactRF™ uses 8 pins on its 36 pin header for asynchronous serial I/O. The interface conforms to standard RS-232.

The signals in the asynchronous serial interface are described below:

DCD *Data Carrier Detect* - **Output from Module** - When asserted (positive voltage), DCD informs the DTE that a communications link has been established with another CompactRF™.

RXD *Receive Data* - **Output from Module** - Signals transferred from the CompactRF™ are received by the DTE via RX.

TXD *Transmit Data* - **Input to Module** - Signals are transmitted from the DTE via TX to the CompactRF™.

DTR *Data Terminal Ready* - **Input to Module** - Asserted by the DTE to inform the modem that it is alive and ready for communications.

SG *Signal Ground* - Provides a ground reference for all signals transmitted by both DTE and DCE.

DSR *Data Set Ready* - **Output from Module** - Asserted by the DCE to inform the DTE that it is alive and ready for communications. DSR is the modem's equivalent of the DTR signal.

RTS *Request to Send* - **Input to Module** - A "handshaking" signal which is asserted by the DTE when it is ready. When hardware handshaking is used, the RTS signal indicates to the DCE that the host can receive data.

CTS *Clear to Send* - **Output from Module** - A "handshaking" signal which is asserted by the DCE when it has enabled communications and transmission from the DTE can commence. When hardware handshaking is used, the CTS signal indicates to the host that the DCE can receive data.

Notes: It is typical to refer to RXD and TXD from the perspective of the DTE. This should be kept in mind when looking at signals relative to the modem (DCE); the modem *transmits* data on the RXD line, and *receives* on TXD.

"DCE" and "modem" are often synonymous since a modem is typically a DCE device.

"DTE" is, in most applications, a device such as a host microprocessor.

Modem **(DCE)**	Signal	Host Microprocessor **(DTE)**
1 ———	DCD ——→	IN
2 ———	RX ——→	IN
3 ←———	TX ———	OUT
4 ←———	DTR ———	OUT
5 ———	SG ——→	IN
6 ———	DSR ——→	IN
7 ←———	RTS ———	OUT
8 ———	CTS ——→	IN

Arrows denote the direction that signals are asserted (*e.g.*, DCD originates at the DCE and tells the DTE that a carrier is present).

C. Factory Default Settings

AT&F1 - Master Default Settings

E1, Q0, V1, W0, S0=0, S2=43, S3=13, S4=10, S5=8

DCD	&C1 (On)
DTR	&D0 (DTR is ignored)
Framing	&E0 (Disabled)
Handshaking	&K3 (Enabled)
DSR	&S1 (On in Data, Off in Command)
Operating Mode	S101=1 (Master P-MP)
Serial Baud Rate	S102=1 (115kbaud)
Wireless Link Rate	S103=4 (Fast, FEC)
Network Address	S104=1
Unit Address	S105=1
Primary Hop Pattern	S106=0
Encryption Key	S107=1
Output Power	S108=2 (100mW)
Hop Interval	S109=8
Data Format	S110=1 (8N1)
Packet Minimum Size	S111=1
Packet Maximum Size	S112=255
Packet Retransmissions	S113=2
Link Handshaking	S122=1 (Enabled)
Packet Repeat Interval	S115=1 (Don't Care)
Character Timeout (ms)	S116=8
Modbus Mode	S117=0
RTS/DCD Framing (ms)	S120=0
DCD Timeout (ms)	S121=0
Secondary Hop Pattern	S206=2 (Don't Care)
Packet Retry Limit	S213=2 (Don't Care)

AT&F2 - Slave Default Settings

E1, Q0, V1, W0, S0=1, S2=43, S3=13, S4=10, S5=8

DCD	&C1 (On when modems are synced)
DTR	&D0 (DTR is ignored)
Framing	&E0 (Disabled)
Handshaking	&K3 (Enabled)
DSR	&S1 (On in Data, Off in Command)
Operating Mode	S101=3 (Slave)
Serial Baud Rate	S102=1 (115kbaud)
Wireless Link Rate	S103=4 (Fast, FEC) (Set by Master)
Network Address	S104=1
Unit Address	S105=2
Primary Hop Pattern	S106=0
Encryption Key	S107=1
Output Power	S108=2 (100mW)
Hop Interval	S109=8 (Set by Master)
Data Format	S110=1 (8N1)
Packet Minimum Size	S111=1 (Set by Master)
Packet Maximum Size	S112=255 (Set by Master)
Packet Retransmissions	S113=2 (Don't Care)
Link Handshaking	S122=1 (Enabled) (Set by Master)
Packet Repeat Interval	S115=1
Character Timeout (ms)	S116=9
Modbus Mode	S117=0
RTS/DCD Framing (ms)	S120=0
DCD Timeout (ms)	S121=0
Secondary Hop Pattern	S206=2 (Don't Care)
Packet Retry Limit	S213=2

AT&F3 - Repeater Default Settings

E1, Q0, V1, W0, S0=1, S2=43, S3=13, S4=10, S5=8

DCD	&C1 (On when modems are synced)
DTR	&D0 (DTR is ignored)
Framing	&E0 (Disabled)
Handshaking	&K3 (Enabled)
DSR	&S1 (On in Data, Off in Command)
Operating Mode	S101=4 (Repeater)
Serial Baud Rate	S102=1 (115kbaud)
Wireless Link Rate	S103=4 (Fast, FEC) (Set by Master)
Network Address	S104=1
Unit Address	S105=3
Primary Hop Pattern	S106=0
Encryption Key	S107=1
Output Power	S108=2 (100mW)
Hop Interval	S109=8 (Set by Master)
Data Format	S110=1 (8N1)
Packet Minimum Size	S111=1 (Set by Master)
Packet Maximum Size	S112=255 (Set by Master)
Packet Retransmissions	S113=2
Link Handshaking	S122=1 (Enabled) (Set by Master)
Packet Repeat Interval	S115=1
Character Timeout (ms)	S116=8
Modbus Mode	S117=0
RTS/DCD Framing (ms)	S120=0
DCD Timeout (ms)	S121=0
Secondary Hop Pattern	S206=2
Packet Retry Limit	S213=2

AT&F4 -Slave Through Repeater Default Settings

E1, Q0, V1, W0, S0=1, S2=43, S3=13, S4=10, S5=8

DCD	&C1 (On when modems are synced)
DTR	&D0 (DTR is ignored)
Framing	&E0 (Disabled)
Handshaking	&K3 (Enabled)
DSR	&S1 (On in Data, Off in Command)
Operating Mode	S101=3 (Slave)
Serial Baud Rate	S102=1 (115kbaud)
Wireless Link Rate	S103=4 (Fast, FEC) (Set by Master)
Network Address	S104=1
Unit Address	S105=4
Primary Hop Pattern	S106=2
Encryption Key	S107=1
Output Power	S108=2 (100mW)
Hop Interval	S109=8 (Set by Master)
Data Format	S110=1 (8N1)
Packet Minimum Size	S111=1 (Set by Master)
Packet Maximum Size	S112=255 (Set by Master)
Packet Retransmissions	S113=2 (Don't Care)
Link Handshaking	S122=1 (Enabled) (Set by Master)
Packet Repeat Interval	S115=1
Character Timeout (ms)	S116=8
Modbus Mode	S117=0
RTS/DCD Framing (ms)	S120=0
DCD Timeout (ms)	S121=0
Secondary Hop Pattern	S206=2 (Don't Care)
Packet Retry Limit	S213=2

D. Performance Tables

The scope of this appendix is to find the best possible performance and maximum packet size at different modes of operation. The setup assumes a baud rate of 115k, no retries and no retransmissions..

	Hop Interval	Optimal Packet Size (bytes)	Throughput (kbps)*
Master to Slave Communication. (No Repeater) Link Rate = Fast NO FEC	**1 (8 ms)**	14	20
	2 (12 ms)	66	52
	3 (16 ms)	110	66
	4 (20 ms)	154	74
	5 (30 ms)	255	83
	6 (45 ms)	255	56
	7 (80 ms)	255	31
	8 (120 ms)	255	21
Master to Slave Communication. (No Repeater) Link Rate = Fast WITH FEC	**1 (8 ms)**	5	4
	2 (12 ms)	34	22
	3 (16 ms)	54	28
	4 (20 ms)	76	32
	5 (30 ms)	130	38
	6 (45 ms)	210	43
	7 (80 ms)	255	30
	8 (120 ms)	255	20
Master to Repeater Direct Communication. Link Rate = Fast NO FEC	**1 (8 ms)**	N/A	N/A
	2 (12 ms)	3	1
	3 (16 ms)	22	13
	4 (20 ms)	44	21
	5 (30 ms)	101	32
	6 (45 ms)	178	39
	7 (80 ms)	255	31
	8 (120 ms)	255	21
Master to Repeater Direct Communication. Link Rate = Fast WITH FEC	**1 (8 ms)**	N/A	N/A
	2 (12 ms)	N/A	N/A
	3 (16 ms)	5	2
	4 (20 ms)	16	6
	5 (30 ms)	43	12
	6 (45 ms)	80	16
	7 (80 ms)	174	20
	8 (120 ms)	255	20
Master to Slave Through One or More Repeaters. Link Rate = Fast NO FEC	**1 (8 ms)**	N/A	N/A
	2 (12 ms)	3	1
	3 (16 ms)	22	13
	4 (20 ms)	43	21
	5 (30 ms)	93	31
	6 (45 ms)	174	38
	7 (80 ms)	255	31
	8 (120 ms)	255	21
Master to Slave Through One or More Repeaters. Link Rate = Fast WITH FEC	**1 (8 ms)**	N/A	N/A
	2 (12 ms)	N/A	N/A
	3 (16 ms)	N/A	N/A
	4 (20 ms)	14	6
	5 (30 ms)	40	12
	6 (45 ms)	80	16
	7 (80 ms)	174	19
	8 (120 ms)	255	20

F. Technical Specifications

Electrical/Physical

Data Interface	Asynchronous Serial Port, TTL Levels
Signals	Sig. Gnd, TX, RX, DCD, DSR, DTR, RTS, CTS
Baud rate	2,400 - 19200 bps, (user-selectable) Up to 19200 full-duplex sustained throughput
Communications Range[1]	16 kilometres (10 miles)
Voltage Requirements	4.75 to 5.5 VDC, 1.0 Amp
Current Consumption	Rx: 85mA; Tx 1mW: 100mA; Tx 10mW: 132mA; Tx 100mW: 231mA; Tx 1W: 600mA; Sleep: <1.5mA
Operating Frequency	902 - 928 MHz
System Gain	133 dB
Sensitivity	-103 dBm
Output Power	1mW, 10mW, 100mW, 1W (user-selectable)
Spreading Code	Frequency Hopping
Hopping Patterns	35 pseudo-random, user-selectable
Error Detection	CRC-16 with auto re-transmit
Memory	Non-volatile configuration memory
Dimensions (LxWxH)	Approx. 2.0” x 1.5” x 0.375”
Weight	Approx. 20 grams
Operating Environment	Temperature: -25 to +70°C Humidity: 5 to 95%, non-condensing
Storage Temperature	-40 to 90°C

1. Clear line-of-sight, elevated antennas.

G. Development Board Schematics

Schematics begin on next page.

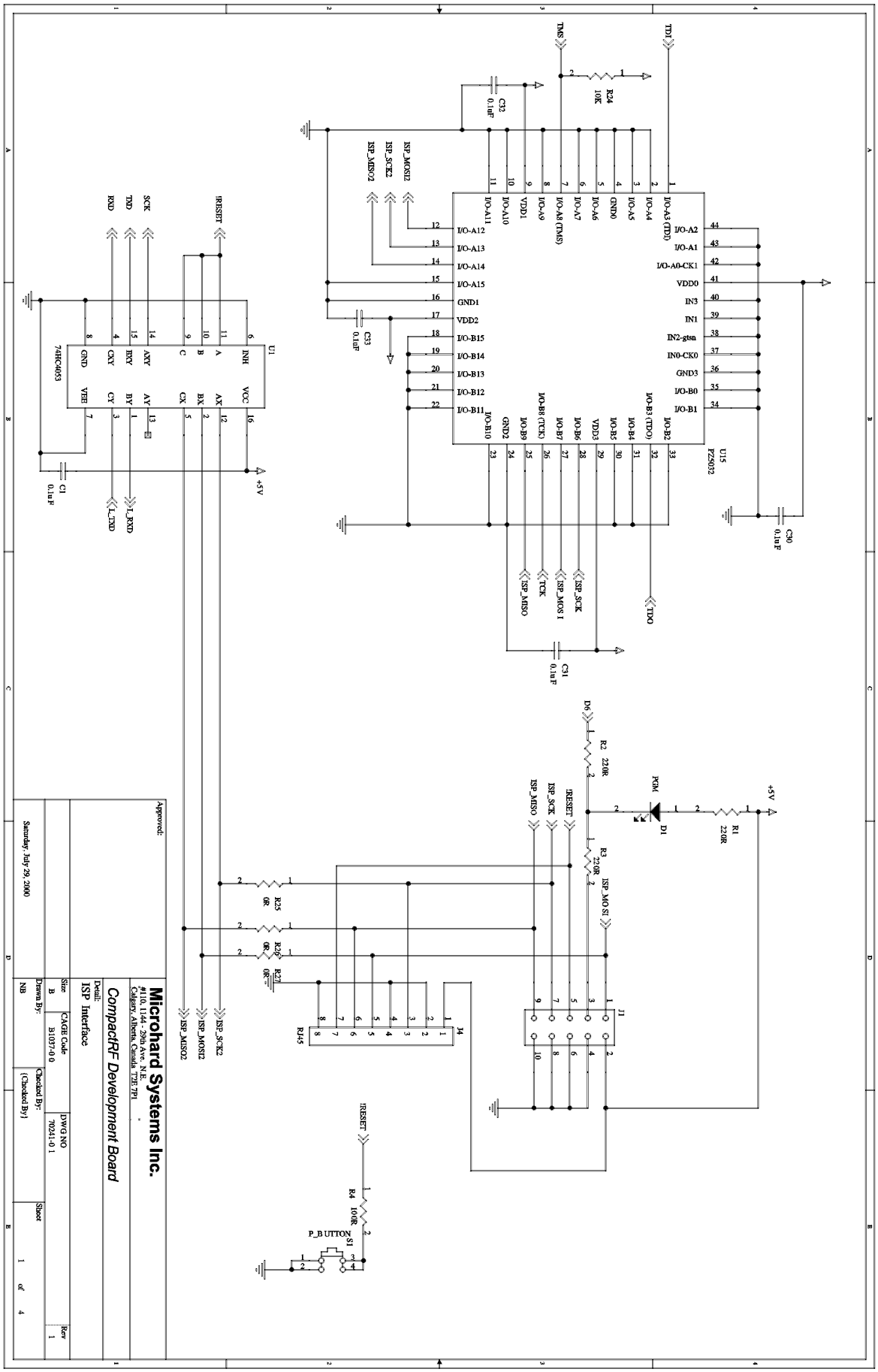
U15
PZ5032
U1
74HC4053
Microhard Systems Inc.
#110, 1144 - 29th Ave. N.E.
Calgary, Alberta, Canada T2E 7P1
CompactRF Development Board
Detail:
ISP Interface
Size
B
CAGE Code
B1037-0 0
DWG NO
70241-0 1
Rev
1
Drawn By:
NB
Checked By:
{Checked By}
Sheet
1 of 4
Saturday, July 29, 2000
Approved:

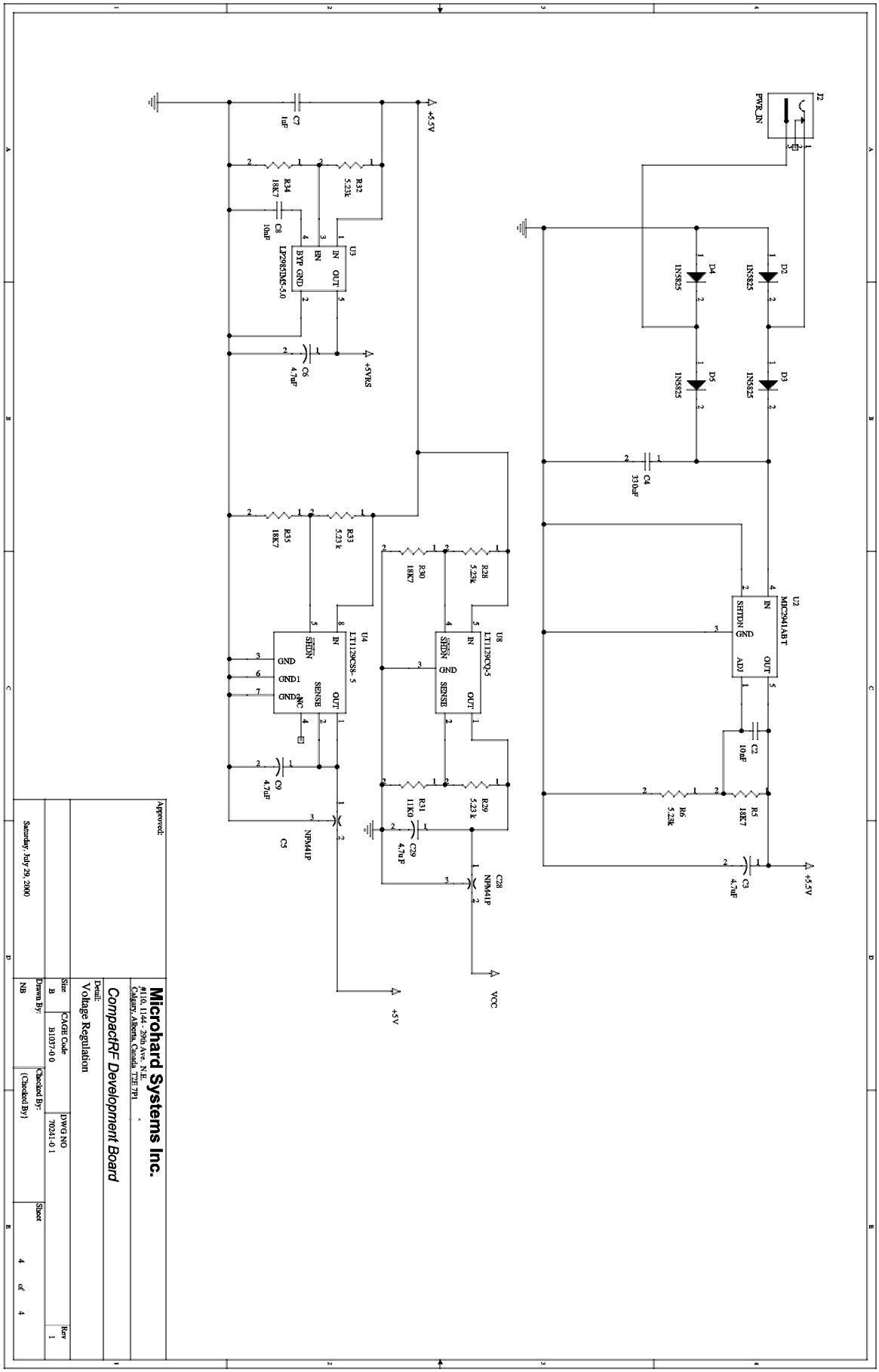
J2
PWR_IN
D2
1N5825
D3
1N5825
D4
1N5825
D5
1N5825
C4
330uF
U2
MIC2941ABT
IN
SHTDN
GND
ADJ
OUT
C2
10uF
R6
5.23k
R5
18K7
C3
4.7uF
+5.5V
U3
LP2985IM5-5.0
IN
EN
BYP
GND
OUT
C7
1uF
R34
18K7
C8
10nF
R32
5.23k
C6
4.7uF
+5VRS
U4
LT1129CS8-5
SHDN
GND
GND1
GND2
NC
SENSE
OUT
R35
18K7
R33
5.23k
C9
4.7uF
C5
NPN441P
U8
LT1129CQ-5
R28
5.23k
R30
18K7
R29
5.23k
R31
11K0
C29
4.7uF
C28
NPN441P
VCC
+5V
Approved:
Microhard Systems Inc.
#110, 1144 - 29th Ave. N.E.
Calgary, Alberta, Canada T2E 7P1
CompactRF Development Board
Detail:
Voltage Regulation
Size
B
CAGE Code
81037-0 0
DWG NO
70241-0 1
Rev
1
Drawn By:
NB
Checked By:
(Checked By)
Sheet
4 of 4
Saturday, July 29, 2000

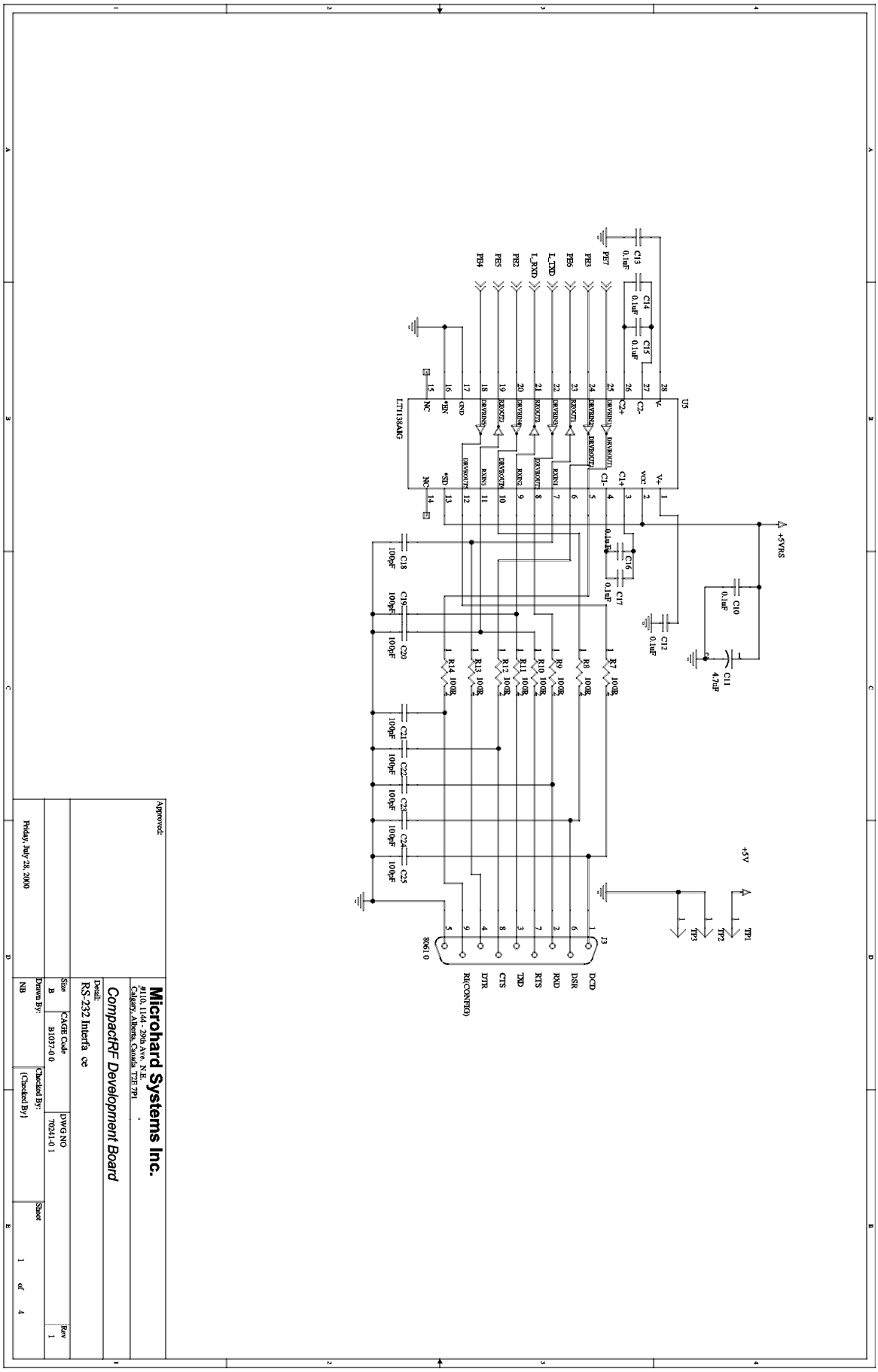
U5
LT1138AIG
J3
DB9
DCD
DSR
RXD
RTS
TXD
CTS
DTR
RI(CONFIG)
+5V
+5VRS
TP1
TP2
TP3
Microhard Systems Inc.
#110, 1144 - 29th Ave. N.E.
Calgary, Alberta, Canada T2E 7P1
CompactRF Development Board
Detail:
RS-232 Interface
Size
B
CAGE Code
31037-010
DWG NO
70241-01
Rev
1
Drawn By:
NB
Checked By:
(Checked By)
Sheet
1 of 4
Approved:
Friday, July 28, 2000

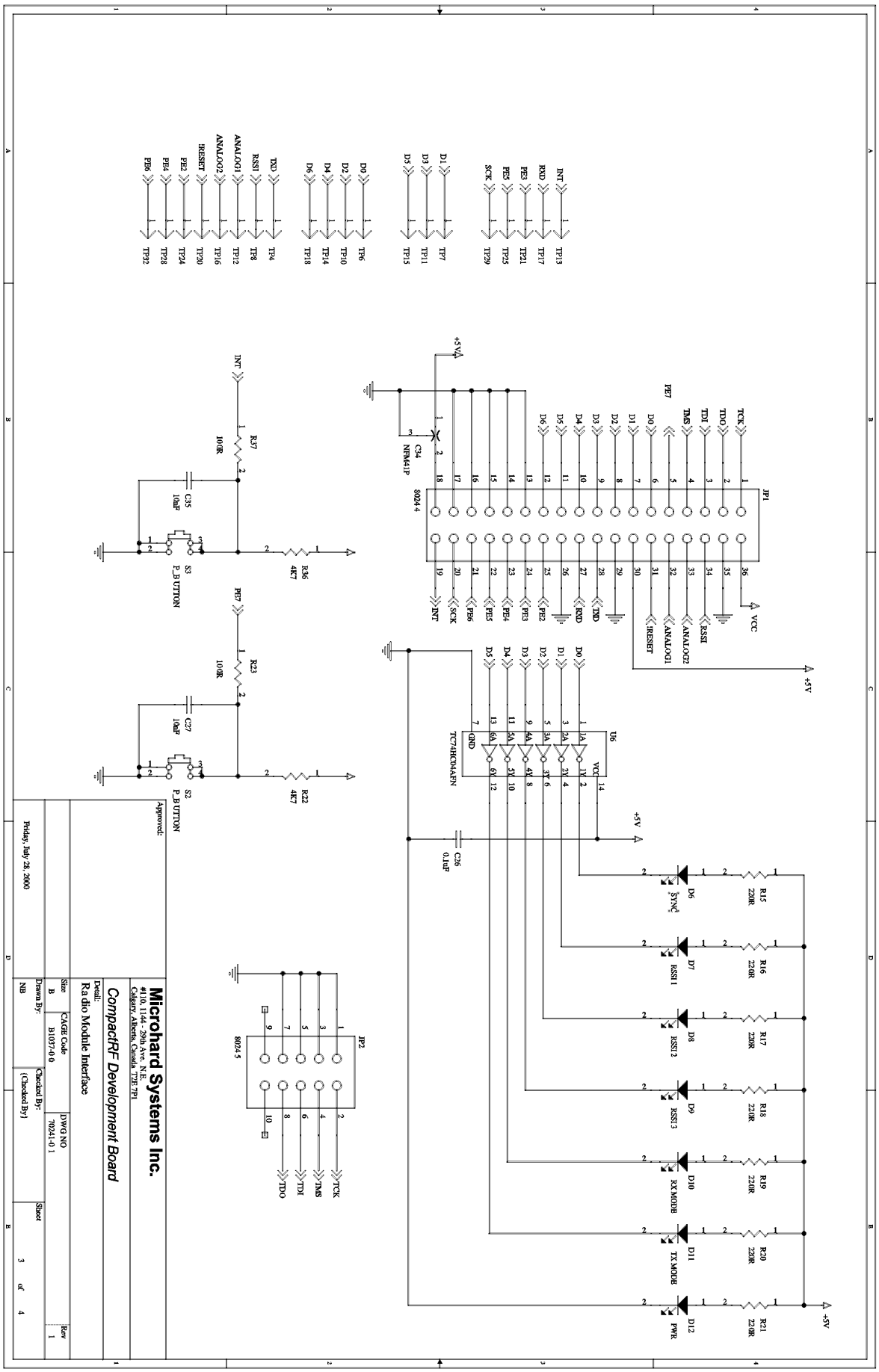
Microhard Systems Inc.
#110, 1144 - 29th Ave. N.E.
Calgary, Alberta, Canada T2E 7P1
CompactRF Development Board
Detail:
Radio Module Interface
Size
B
CAGE Code
81037-00
DWG NO
70241-01
Rev
1
Drawn By:
NB
(Checked By)
Checked By:
Sheet
3 of 4
Friday, July 28, 2000
Approved:
JP1
JP2
U6
TC74HC04AFN
S2
S3
P_BUTTON
C34
NFM41P
C26
0.1uF
C35
10uF
C27
10uF
R37
100R
R23
100R
R36
4K7
R22
4K7
R15
220R
R16
220R
R17
220R
R18
220R
R19
220R
R20
220R
R21
220R
D6
Sync
D7
RSSI 1
D8
RSSI 2
D9
RSSI 3
D10
RX MODE
D11
TX MODE
D12
PWR
+5V
VCC
GND
INT
RXD
TXD
SCK
RESET
ANALOG1
ANALOG2
RSSI
TCK
TDO
TDI
TMS
PE7
PE6
PE5
PE4
PE3
PE2
PB6
PB4
PB2
PB0
TP13
TP17
TP21
TP25
TP29
TP15
TP11
TP7
TP18
TP14
TP10
TP6
TP32
TP28
TP24
TP20
TP16
TP12
TP8
TP4

H. Mechanical Drawing

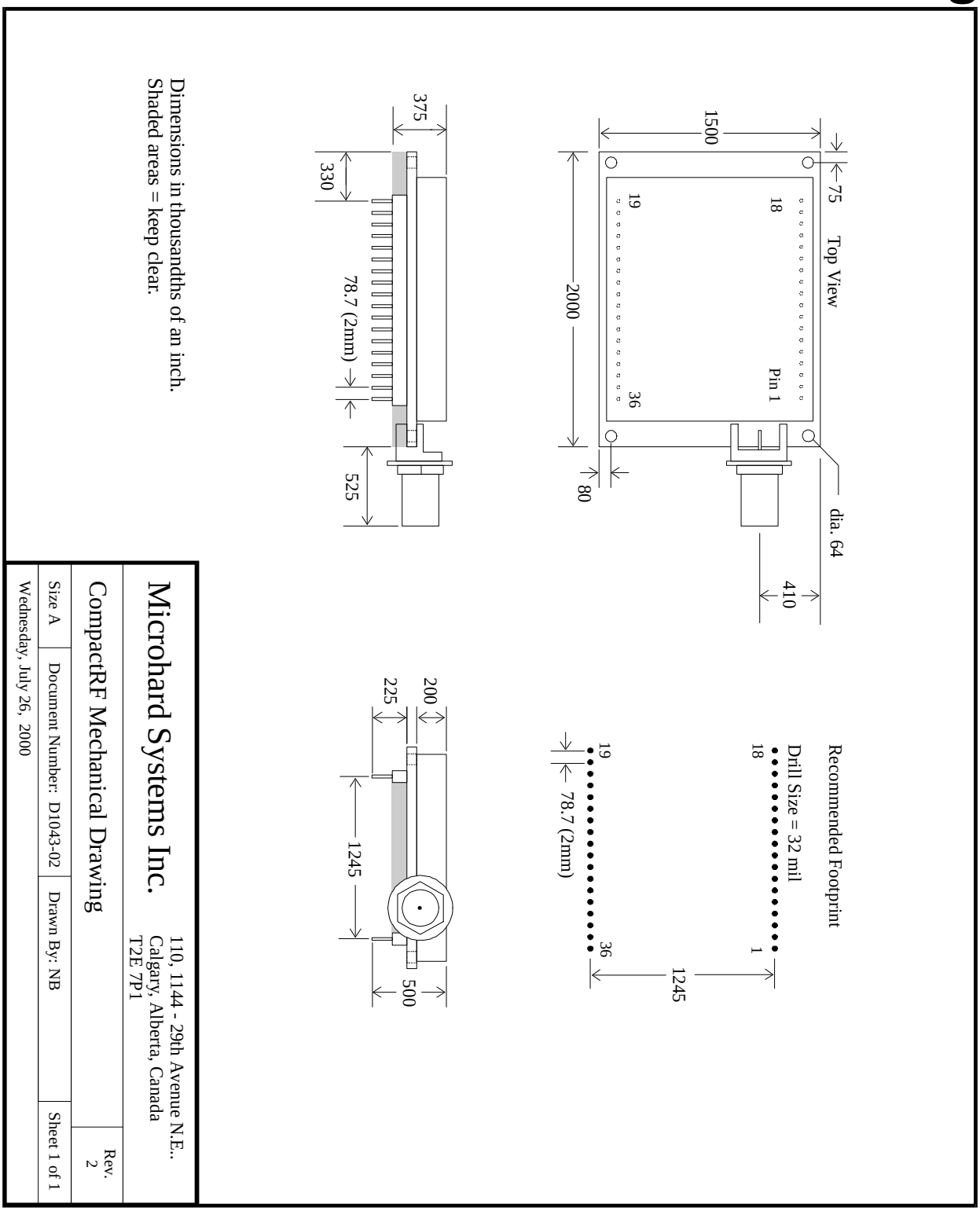

I. Glossary

Terminology Used in the CompactRF™ Operating Manual

Asynchronous communications A method of telecommunications in which units of single bytes of data are sent separately and at an arbitrary time (not periodically or referenced to a clock). Bytes are "padded" with start and stop bits to distinguish each as a unit for the receiving end, which need not be synchronized with the sending terminal.

Attenuation The loss of signal power through equipment, lines/cables, or other transmission devices. Measured in decibels (dB).

Bandwidth The information-carrying capacity of a data transmission medium or device, usually expressed in bits/second (bps).

Baud Unit of signaling speed equivalent to the number of discrete conditions or events per second. If each signal event represents only one bit condition, then baud rate equals bits per second (bps) – this is generally true of the serial data port, so *baud* and *bps* have been used interchangeably in this manual when referring to the serial port; this is not always the case during the DCE-to-DCE communications, where a number of modulation techniques are used to increase the bps rate over the baud rate.

Bit The smallest unit of information in a binary system, represented by either a 1 or 0. Abbreviated "b".

Bits per second (b/s or bps) A measure of data transmission rate in serial communications. Also see *baud*.

Byte A group of bits, generally 8 bits in length. A byte typically represents a character of data. Abbreviated "B".

Characters per second (cps) A measure of data transmission rate for common exchanges of data. A character is usually represented by 10 bits: an 8-bit byte plus two additional bits for marking the start and stop. Thus, in most cases (but not always), *cps* is related to *bits per second (bps)* by a 1:10 ratio.

CRC (Cyclic Redundancy Check) An error-detection scheme for transmitted data. Performed by using a polynomial algorithm on data, and appending a checksum to the end of the packet. At the receiving end, a similar algorithm is performed and checked against the transmitted checksum.

Crossover cable (Also known as rollover, null-modem, or modem-eliminator cable) A cable which allows direct DTE-to-DTE connection without intermediate DCEs typically used to bridge the two communicating devices. Can also be used to make cabled DCE-to-DCE connections. The name is derived from "crossing" or "rolling" several lines, including the TX and RX lines so that transmitted data from one DTE is received on the RX pin of the other DTE and vice-versa.

Data Communications Equipment (DCE, also referred to as Data Circuit-Terminating Equipment, Data Set) A device which facilitates a communications connection between *Data Terminal Equipment* (DTEs). Often, two or more compatible DCE devices are used to "bridge" DTEs which need to exchange data. A DCE performs signal encoding, decoding, and conversion of data sent/received by the DTE, and transmits/receives data with another DCE. Common example is a modem.

Data Terminal Equipment (DTE) An end-device which sends/receives data to/from a DCE, often providing a user-interface for information exchange. Common examples are computers, terminals, and printers.

dBm Stands for "Decibels referenced to one milliwatt (1 mW)". A standard unit of power level commonly used in RF and communications work. *n* dBm is equal to $10^{(n/10)}$ milliwatt, so 0dBm = 1mW, -10dBm = 0.1mW, -20dBm = 0.01mW, etc.

DCE See *Data Communications Equipment*.

DTE See *Data Terminal Equipment*.

Flow Control A method of moderating the transmission of data so that all devices within the communications link (DTEs and DCEs) transmit and receive only as much data as they can handle at once. This prevents devices from sending data which cannot be received at the other end due to conditions such as a full buffer or hardware not in a ready state. This is ideally handled by hardware using flow-control and handshaking signals, but

can be controlled also by software using X-ON/X-OFF (transmitter on/off) commands.

Frequency-hopping A type of *spread spectrum* communication whereby the carrier frequency used between transmitter and receiver changes repeatedly in a synchronized fashion according to a specified algorithm or table. This minimizes unauthorized jamming (interference) and interception of telecommunications.

Full-duplex Where data can be transmitted, simultaneously and independently, bi-directionally.

Half duplex Exists when the communications medium supports bi-directional transmission, but data can only travel in one direction at the same time.

Handshaking A flow-control procedure for establishing data communications whereby devices indicate that data is to be sent and await appropriate signals that allow them to proceed.

Line-of-sight Condition in which a transmitted signal can reach its destination by travelling a straight path, without being absorbed and/or bounced by objects in its path.

Master The station which controls and/or polls one or more Slave stations in a point-to-point or point-to-multipoint network. Often functions as a server or hub for the network.

Non-volatile memory Memory which retains information which is written to it.

Null modem cable See *Crossover cable*.

Point-to-point A simple communications network in which only two DTEs are participants.

Point-to-multipoint A communications network in which a *Master* DTE communicates with two or more *Slave* DTEs.

Repeater A device which automatically amplifies or restores signals to compensate for distortion and/or attenuation prior to retransmission. A repeater is typically used to extend the distance for which data can be reliably transmitted using a particular medium or communications device.

RS-232 (Recommended Standard 232; more accurately, RS-232C or EIA/TIA-232E) Defined by the EIA, a widely known standard electrical and physical interface for linking DCEs and DTEs for serial data communications. Traditionally specifies a 25-pin D-sub connector, although many newer devices use a compact 9-pin connector with only the essential signaling lines used in asynchronous serial communications. Lines have two possible states: “high” (on, active, asserted, carrying +3 to +25 V) or “low” (off, inactive, disasserted, carrying -3 to -25 V).

RTU (Remote Terminal Unit) A common term describing a DTE device which is part of a wide-area network. Often a RTU performs data I/O and transmits the data to a centralized station.

Serial communications A common mode of data transmission whereby character bits are sent sequentially, one at a time, using the same signaling line. Contrast with parallel communications where all bits of a byte are transmitted at once, usually requiring a signal line for each bit.

Shielded cable Interface medium which is internally shrouded by a protective sheath to minimize external electromagnetic interference (“noise”).

Slave A station which is controlled and/or polled by the Master station for communications. Typically represents one end of a point-to-point connection, or one of the terminal nodes in a point-to-multipoint network. Often a RTU is linked by a Slave DCE.

Spread spectrum A method of transmitting a signal over a wider bandwidth (using several frequencies) than the minimum necessary for the originally narrowband signal. A number of techniques are used to achieve spread spectrum telecommunications, including *frequency hopping*. Spread spectrum provides the possibility of sharing the same band amongst many users while increasing the tolerance to interference and noise, and enhancing privacy of communications.

Throughput A measure of the rate of data transmission passing through a data communication system, often expressed as bits or characters per second (bps or cps).