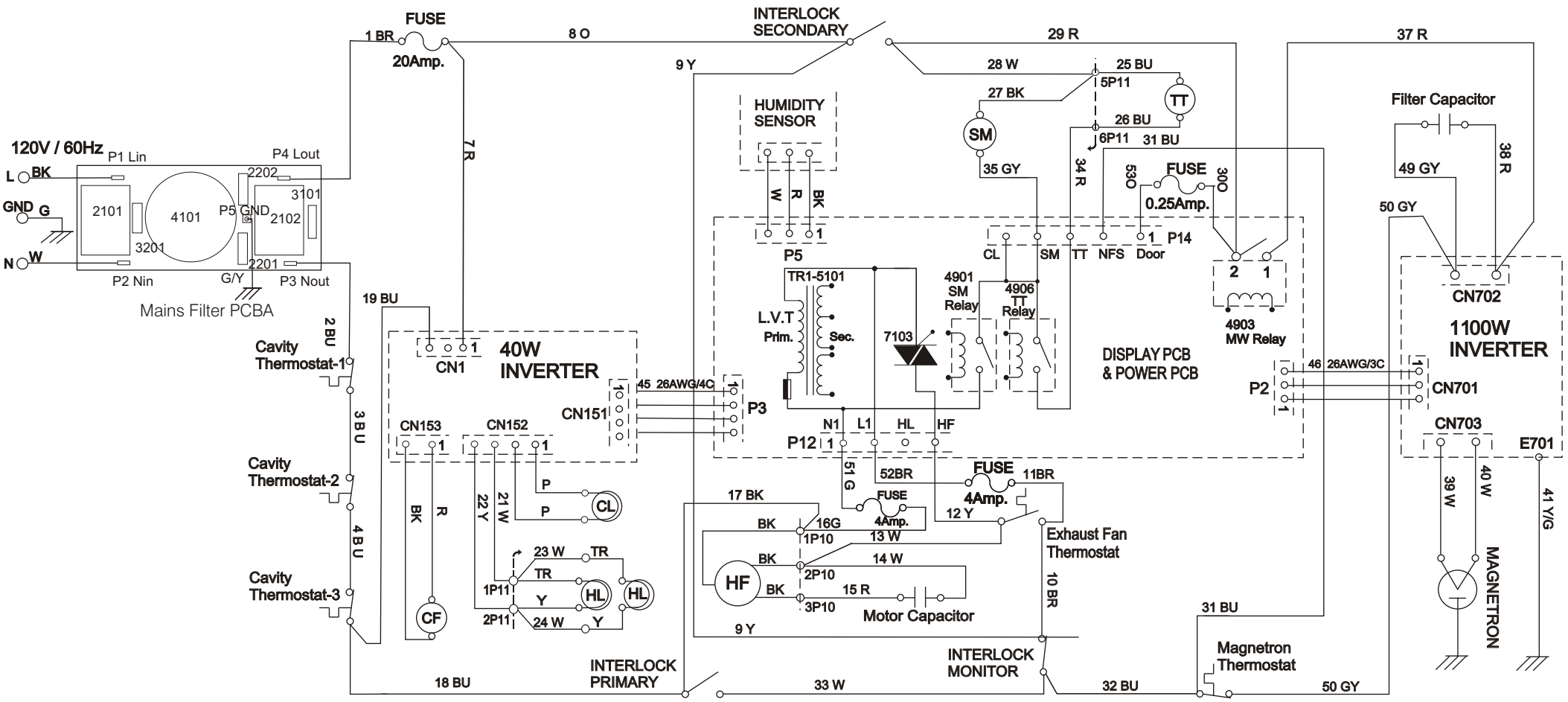

CONDITION: DOOR OPEN

SYMBOL NOTES

- CL — CAVITY LAMP
- HL — HOOD LAMP (COOKTOP LAMP)
- SM — STIRRER MOTOR
- HF — HOOD EXHAUST FAN MOTOR
- TT — TURNTABLE MOTOR
- CF — COOLING FAN MOTOR (DC FAN MOTOR)

P2/P3/P5/P12/P14/CN1/CN151/CN152 /CN153/CN701/CN702/CN703: WIRE TO PCB CONNECTORS

P0/P10/P11: WIRE TO WIRE CONNECTORS

BK:	BLACK	W:	WHITE	BR:	BROWN
BU:	BLUE	G:	GREEN	O:	ORANGE
R:	RED	Y:	YELLOW	GY:	GREY
TR:	TRANSPARENT			P:	PINK
G/Y:	Green/Yellow				

26AWG/3C(4C): RIBBON CABLE/3C(4C)

1 BR
- WIRE COLOR - BROWN
- WIRE NO. - 1

DWG NO.	MU-069

Model: YKHMS175 series

GH5176 series