由 Autodesk 教育版产品制作

技术要求 Technic requirement
1. 压合后上盖与下盖段差和缝隙符合蓝图要求；
2. 指示灯需进行点亮测试（蓝光闪一秒）；
外观和标志应符合蓝图要求，带"*"尺寸需重点检验；
3. 电气测试项目依照《L3TWC079-CS-R-US产品规格书》执行；
4. 物料及成品必须符合QW-Q-043《材料与成品限用物质管理规范》RoHs 2.0管控要求。

REV.	DESCRIPTION	DESIGN	APPROVAL	DATE
A	NEW	Donghua Luo	Xiaolan Deng	2018.06.06

镭雕Date Code管控

1801A
- 生产厂区
- 生产周别
- 生产年份

注：周别按生产的周别变动而变动
例：1801A
1802A
1803A
.
.
.
以此类推

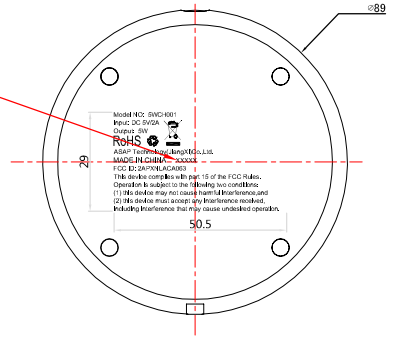

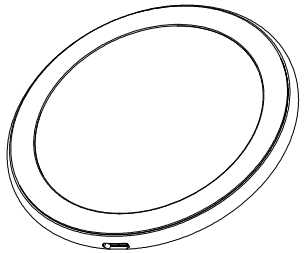

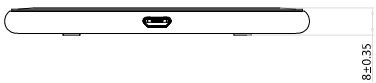

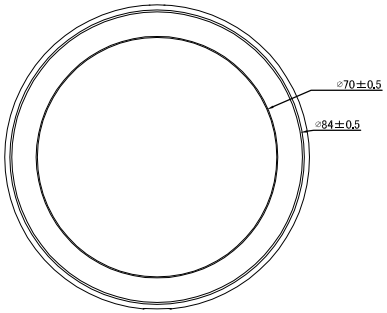

Model NO: 5WCH001
Input: DC 5V/2A
Output: 5W
RoHS
ASAP Technology(JiangXi)Co.,Ltd.
MADE IN CHINA XXXXXX
FCC ID: 2APXNLACA063
This device complies with part 15 of the FCC Rules.
Operation is subject to the following two conditions:
(1) this device may not cause harmful interference,and
(2) this device must accept any interference received,
including interference that may cause undesired operation.

丝印放大效果图

X.±1	X.°±	UNITS	NAME(INTENDED USE)	ASAP 博碩科技(江西)有限公司 ASAP TECHNOLOGY(JIANGXI)CO.,LIMITED
.X±0.5	.X°±	mm	P/N:D82	
.XX±0.10	.XX°±	MATL	CUSTOMER P/N:5WCH001	TITLE: Wireless Charger 5W
.XXX±0.050	.XXX°±			
THESE DRAWINGS AND SPECIFICATIONS ARE THE PROPERTY OF ASAP TECHNOLOGY(JIANGXI)CO., LIMITED AND SHALL NOT BE REPRODUCED,COPIED OR CUED IN ANY MANNER WITHOUT THE PRIOR WRITTEN CONSENT OF ASAP TECHNOLOGY(JIANGXI)CO., LIMITED.		FINISH	APPD: Xiaolan Deng	DWG NO: L3TWC079-CS-R-US
			CHKD:	
		Q'TY	DR: Donghua Luo	SCALE: NONE / SHEET: 1/1 / REV.: A

由 Autodesk 教育版产品制作