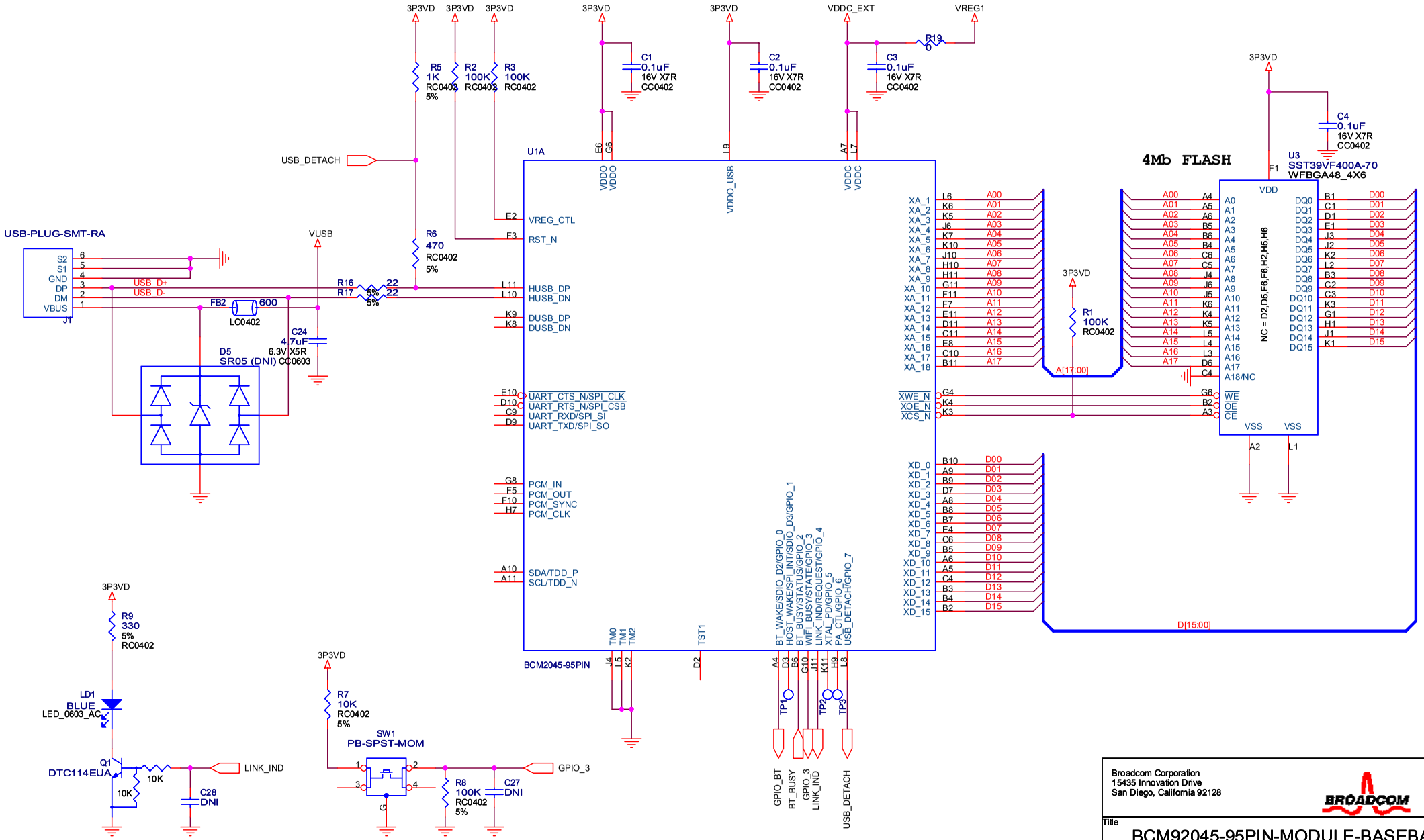

Broadcom Corporation
15435 Innovation Drive
San Diego, California 92128

Title: BCM92045-95PIN-MODULE-BASEBAND

Size: B | Document Number | Rev: 2.0

Date: Friday, January 14, 2005 | Sheet 2 of 3

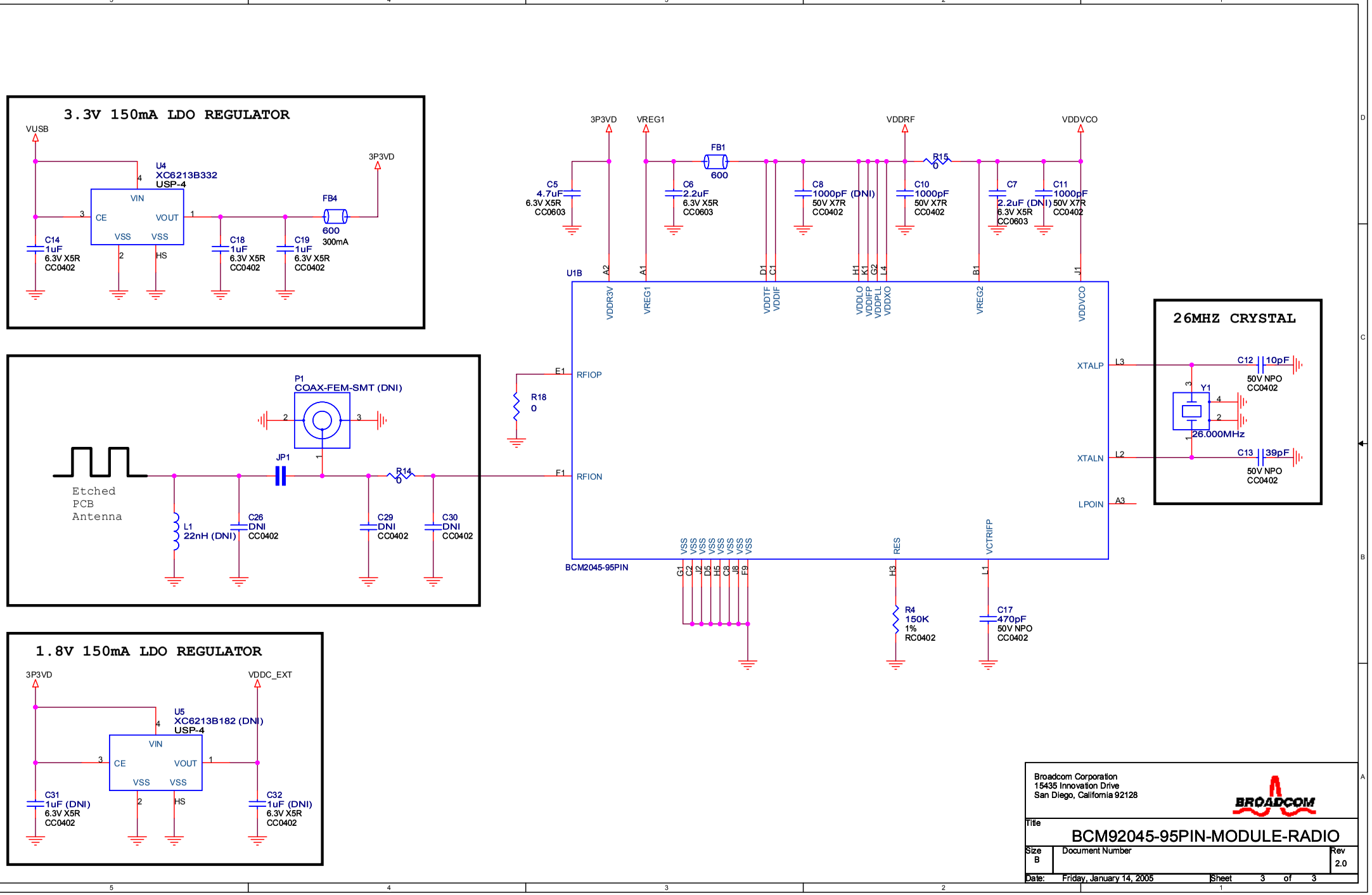
3.3V 150mA LDO REGULATOR
VUSB
U4
XC6213B332
USP-4
VIN
CE
VOUT
VSS
VSS
HS
3P3VD
FB4
600
300mA
C14
1uF
6.3V X5R
CC0402
C18
1uF
6.3V X5R
CC0402
C19
1uF
6.3V X5R
CC0402
P1
COAX-FEM-SMT (DNI)
JP1
R14
0
Etched
PCB
Antenna
L1
22nH (DNI)
C26
DNI
CC0402
C29
DNI
CC0402
C30
DNI
CC0402
R18
0
1.8V 150mA LDO REGULATOR
3P3VD
VDDC_EXT
U5
XC6213B182 (DNI)
USP-4
C31
1uF (DNI)
6.3V X5R
CC0402
C32
1uF (DNI)
6.3V X5R
CC0402
3P3VD
VREG1
VDDRF
VDDVCO
FB1
600
R15
0
C5
4.7uF
6.3V X5R
CC0603
C6
2.2uF
6.3V X5R
CC0603
C8
1000pF (DNI)
50V X7R
CC0402
C10
1000pF
50V X7R
CC0402
C7
2.2uF (DNI)
6.3V X5R
CC0603
C11
1000pF
50V X7R
CC0402
U1B
VDDR3V
VREG1
VDDTF
VDDIF
VDDLO
VDDIFP
VDDPLL
VDDXO
VREG2
VDDVCO
RFIOP
RFION
XTALP
XTALN
LPOIN
RES
VCTRIFP
VSS
BCM2045-95PIN
R4
150K
1%
RC0402
C17
470pF
50V NPO
CC0402
26MHZ CRYSTAL
C12
10pF
50V NPO
CC0402
Y1
26.000MHz
C13
39pF
50V NPO
CC0402
Broadcom Corporation
15435 Innovation Drive
San Diego, California 92128
BROADCOM
Title
BCM92045-95PIN-MODULE-RADIO
Size
B
Document Number
Rev
2.0
Date:
Friday, January 14, 2005
Sheet
3
of
3