REV	DATE	DESCRIPTION	APPROVED

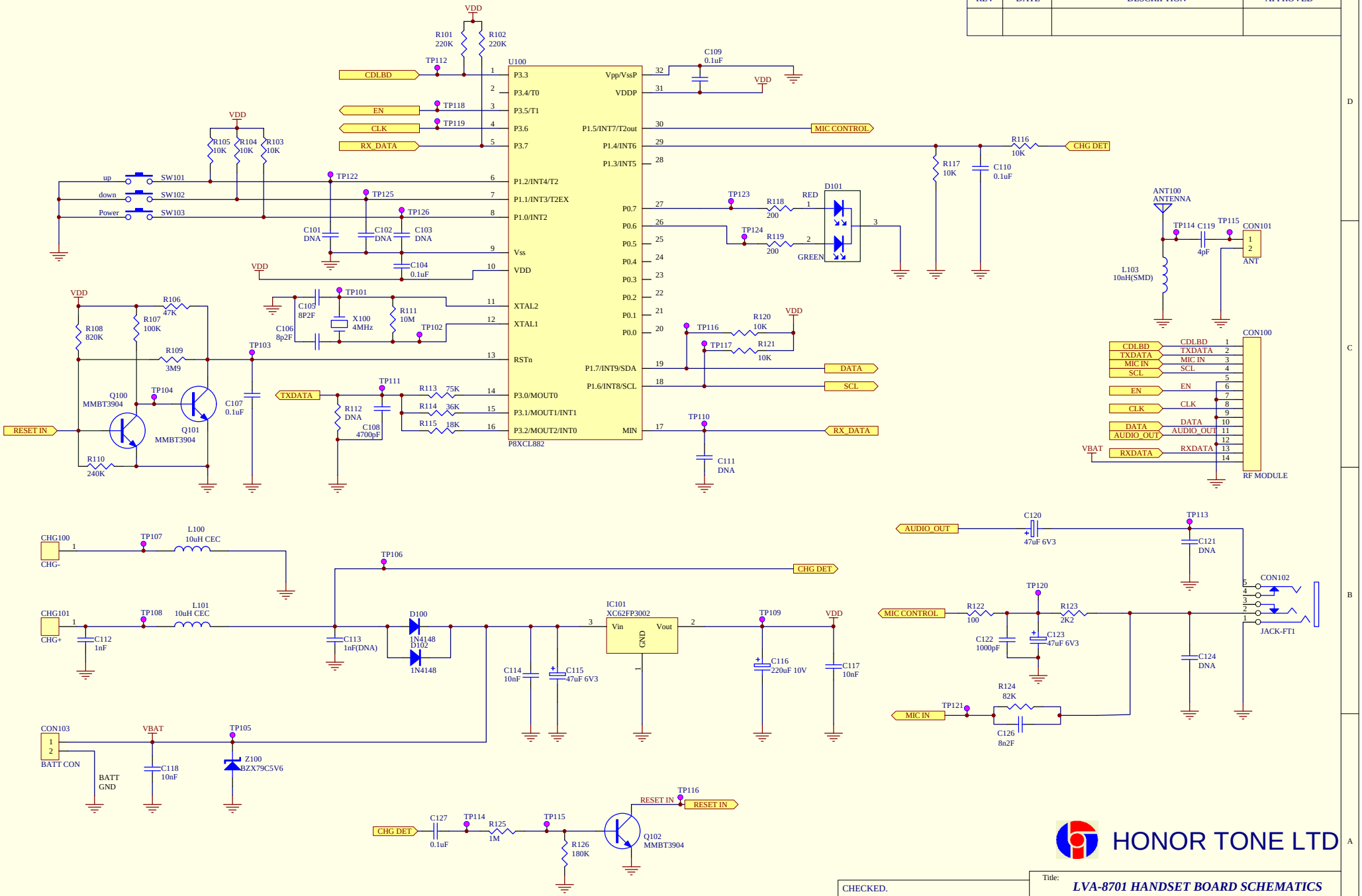

HONOR TONE LTD

CHECKED.

APPROVED.

Title: *LVA-8701 HANDSET BOARD SCHEMATICS*

Size: A3 | Number: | Revision: 1.1

File: C:\RND03\lva-8701\sch\Lva8701-a.Ddb - Documents\B-H VER\HSVer1_1.sch

Date: 22-Jun-2001 | Sheet 1 of 1 | Drawn by:

REV	DATE	DESCRIPTION	APPROVED
1.0	MAY.3.2001	FOR FTMS	Kenneth Chu

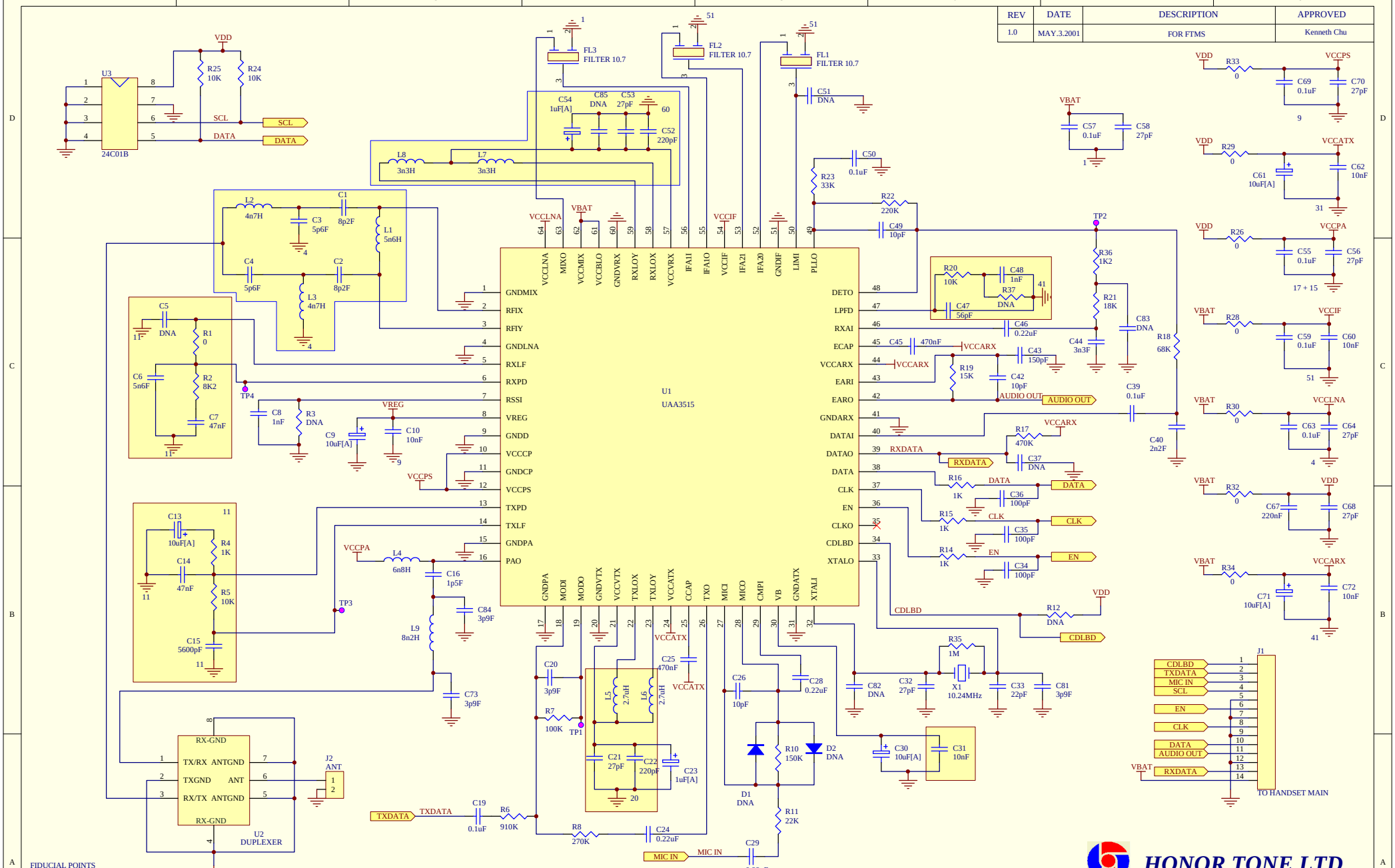

FIDUCIAL POINTS

F1

F2

F3

F4

NOTES:

1. ALL CAPACITORS & RESISTORS USED ARE SMD 0603 UNLESS OTHERWISE SPECIFIED.
2. ALL INDUCTORS AND DIODES USED ARE SMD 0603 UNLESS OTHERWISE SPECIFIED.

HONOR TONE LTD

CHECK. W.Q.Li

APPROVED. Kenneth Chu

Text

Title: *LVA8701 HANDSET RF BOARD SCHEMATIC*

Size: A3 | Number: | Revision: 1.0

File: C:\RND03\lva-8701\sch\Lva8701-a.Ddb - Documents\RF VER\HSRFVer1.0.sch

Date: 22-Jun-2001 | Sheet 1 of 1 | Drawn by: