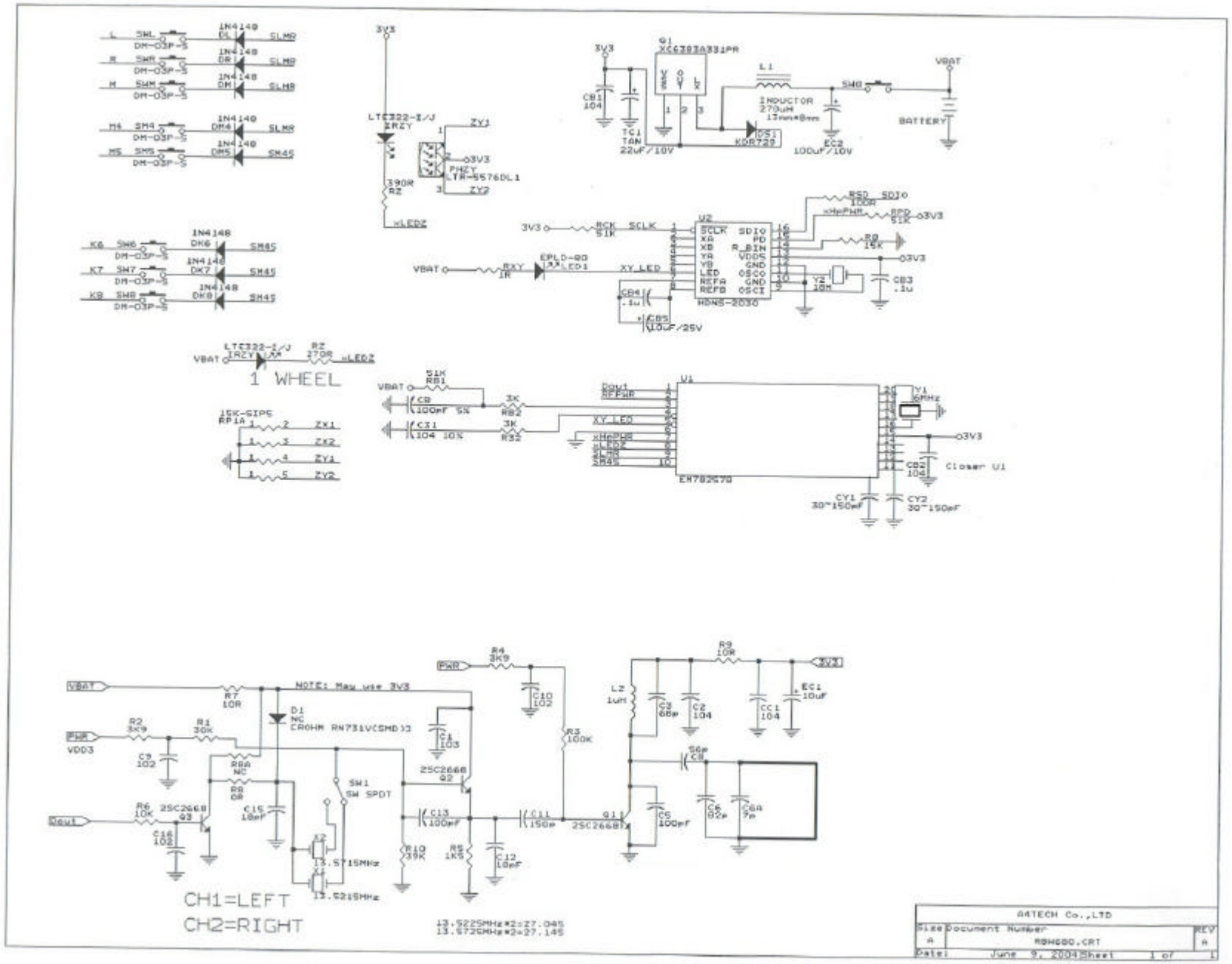
1 WHEEL
CH1=LEFT
CH2=RIGHT
13.522SMHz*2=27.045
13.572GMHz*2=27.145
AATECH Co.,LTD
Size A
Document Number
RSH600.CRT
REV A
Date: June 9, 2004 Sheet 1 of 1