REV.	DATE	DESCRIPTION	APP'D	CHECKED	DRAWER
01	2006/08/09				Chiefland

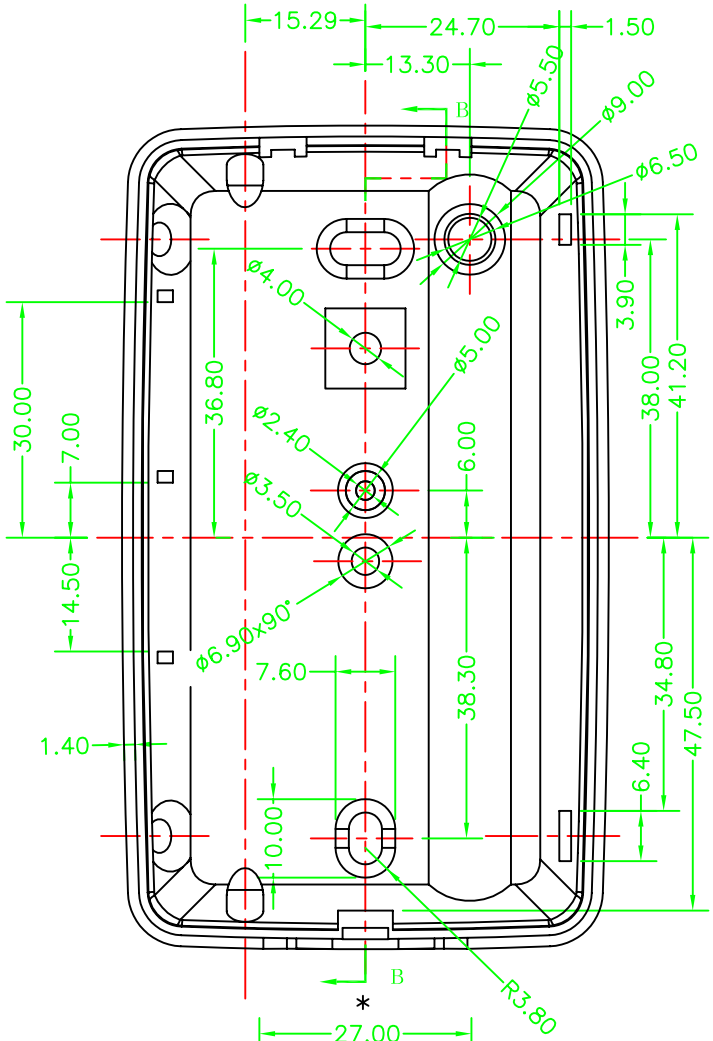

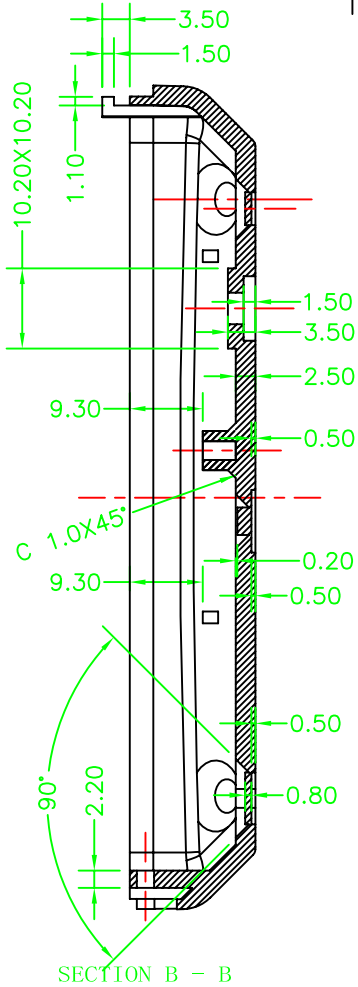

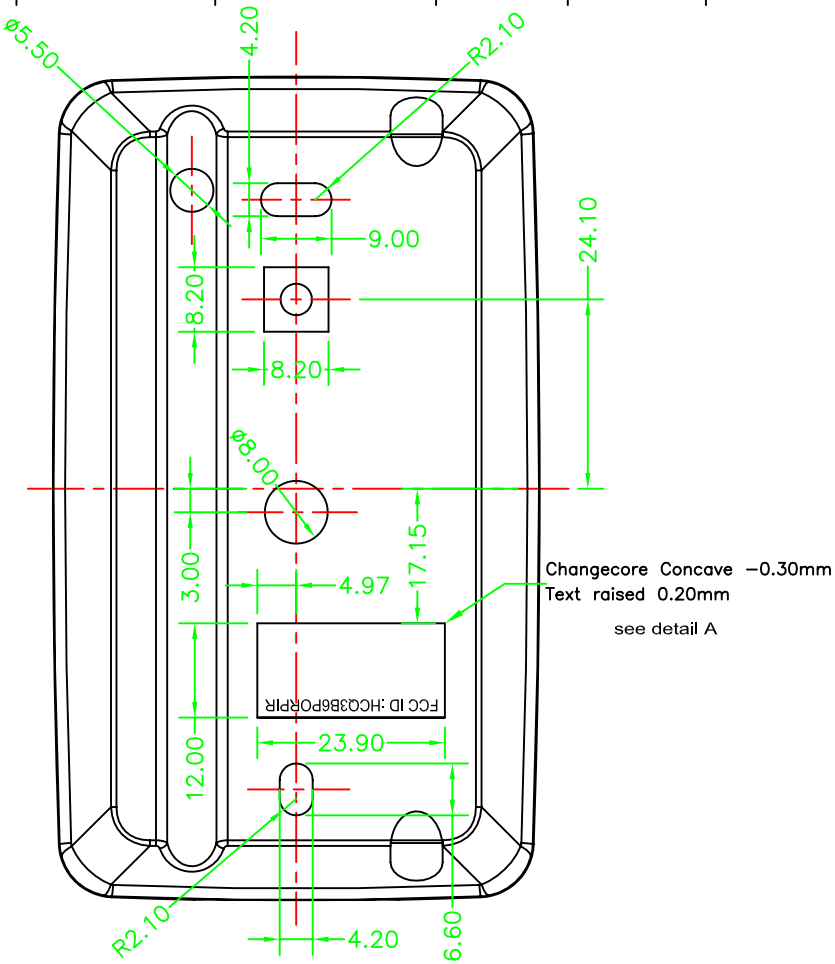

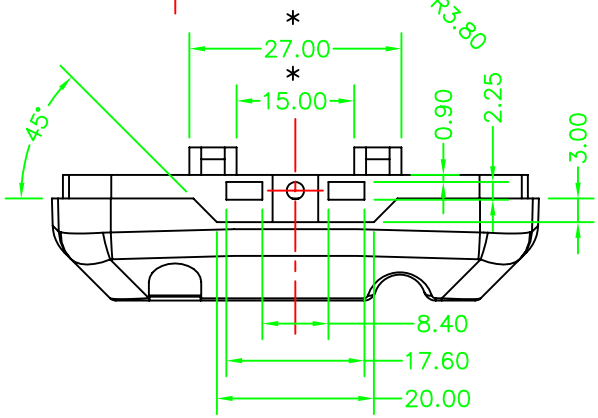

FCC ID :HCQ3B6PORPIR

detail A scale : 1.5X rotate : 180 deg

UNIT: MM	MATERIAL: ABS white			TITLE: PIR100 Bottom Case	
TOLERANCE: 0. : ±0.3 0.0 : ±0.2 0.00: ±0.10 A° : ±1.0° Do not scale	FINISH:			PART NO: PL06–PR–1000B	
	SCALE: 1 : 1	PROJECTION	SIZE A4	DWG. NO. PL06–PR–1000B	SHEET NO: 1 OF 1

PORTMAN