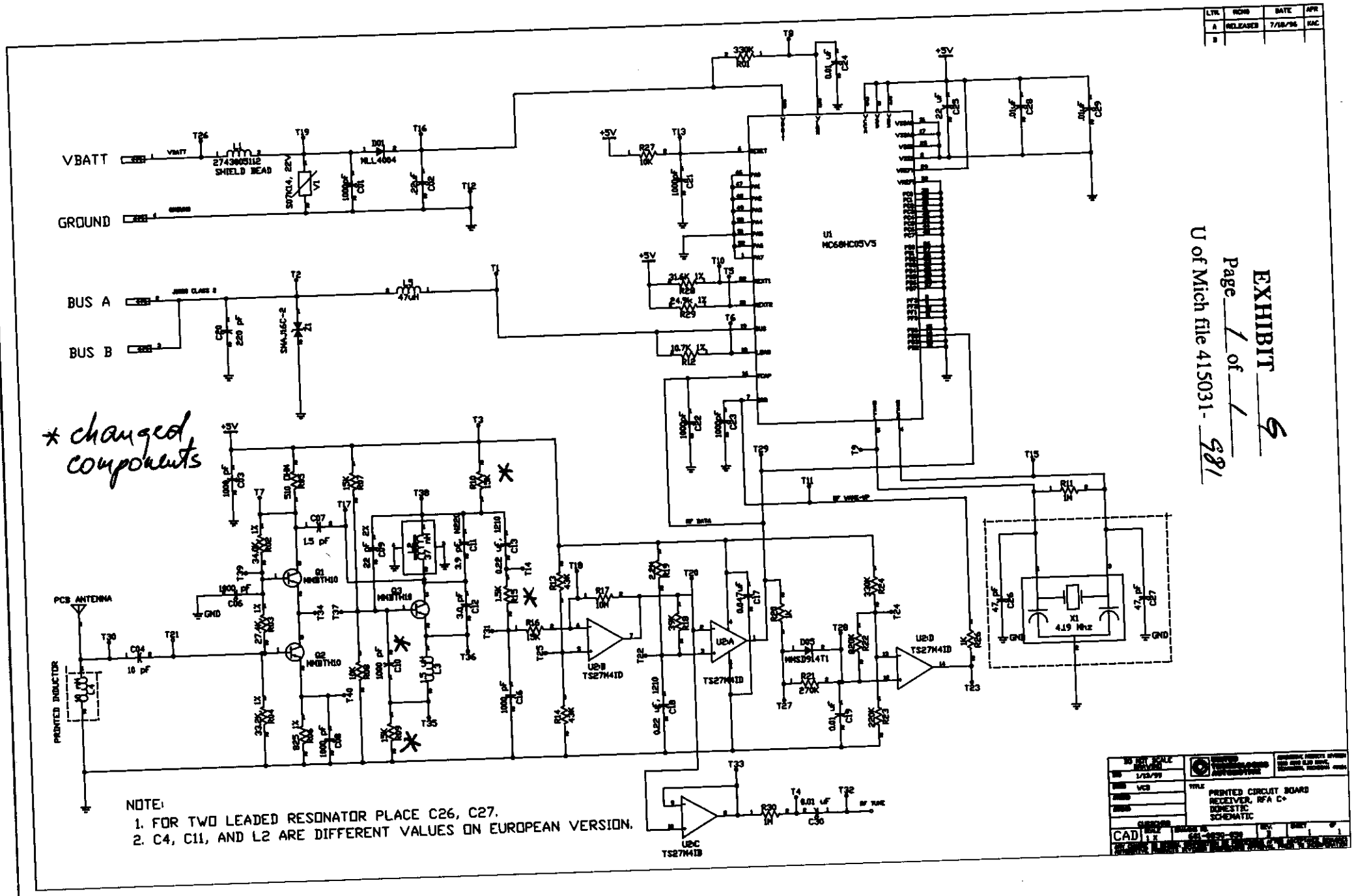

* changed components

EXHIBIT 6
Page 1 of 1
U of Mich file 415031-581