BLOCK DIAGRAM

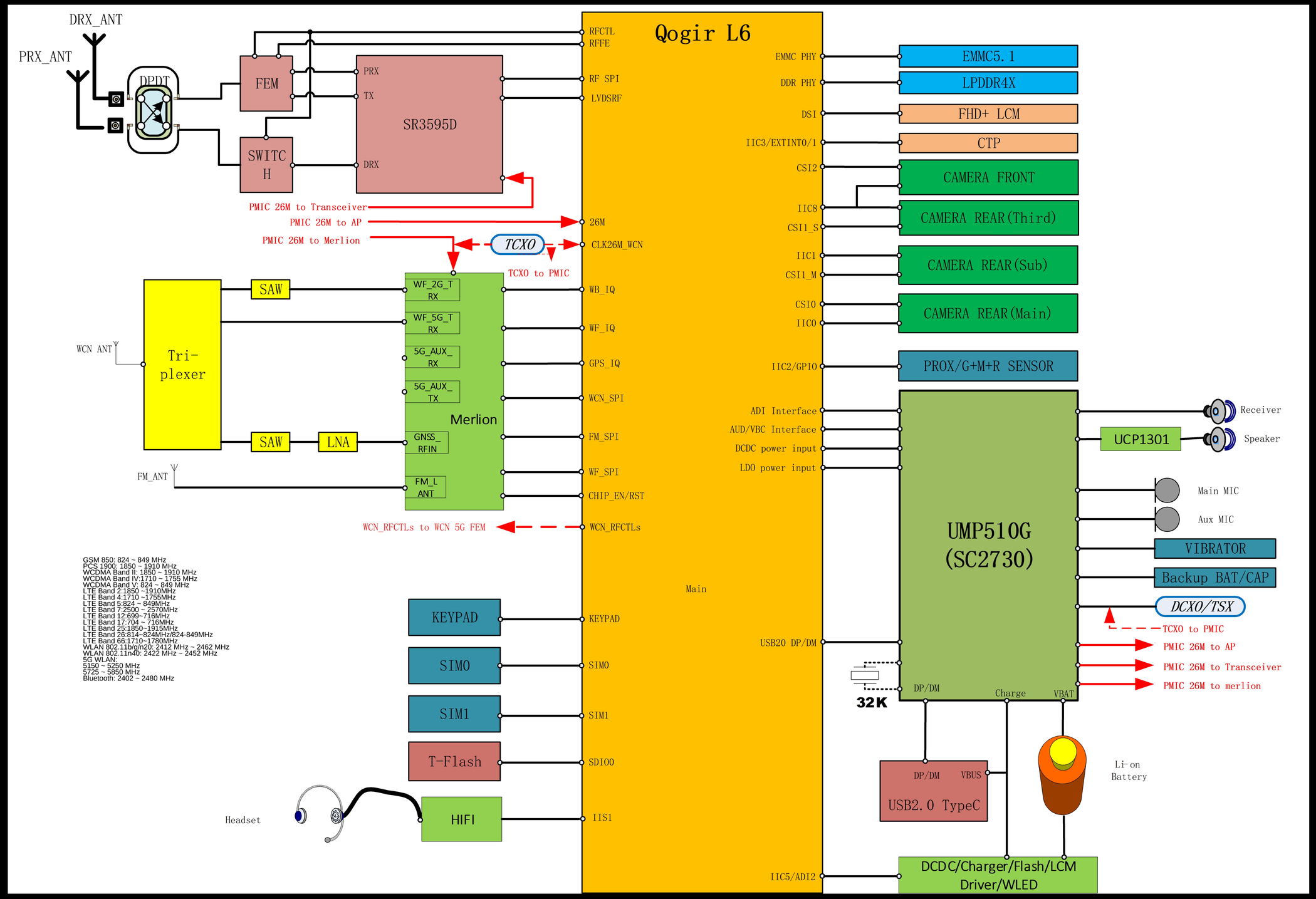

TITLE & REV:	UMS9230_A_CS_A_SCH_V0.1.0
DOCUMENT NO.:	
DESIGNER: Hongyu.Yang	DATED: 2021-05-18
DEPARTMENT: HWE	
REVIEWED: Leiwen.Ma	DATED: 2021-05-18
COMPANY: UNISOC	
APPROVED: Hongqing.Li	DATED: 2021-05-18
CONFIDENTIAL AND PROPRIETARY	