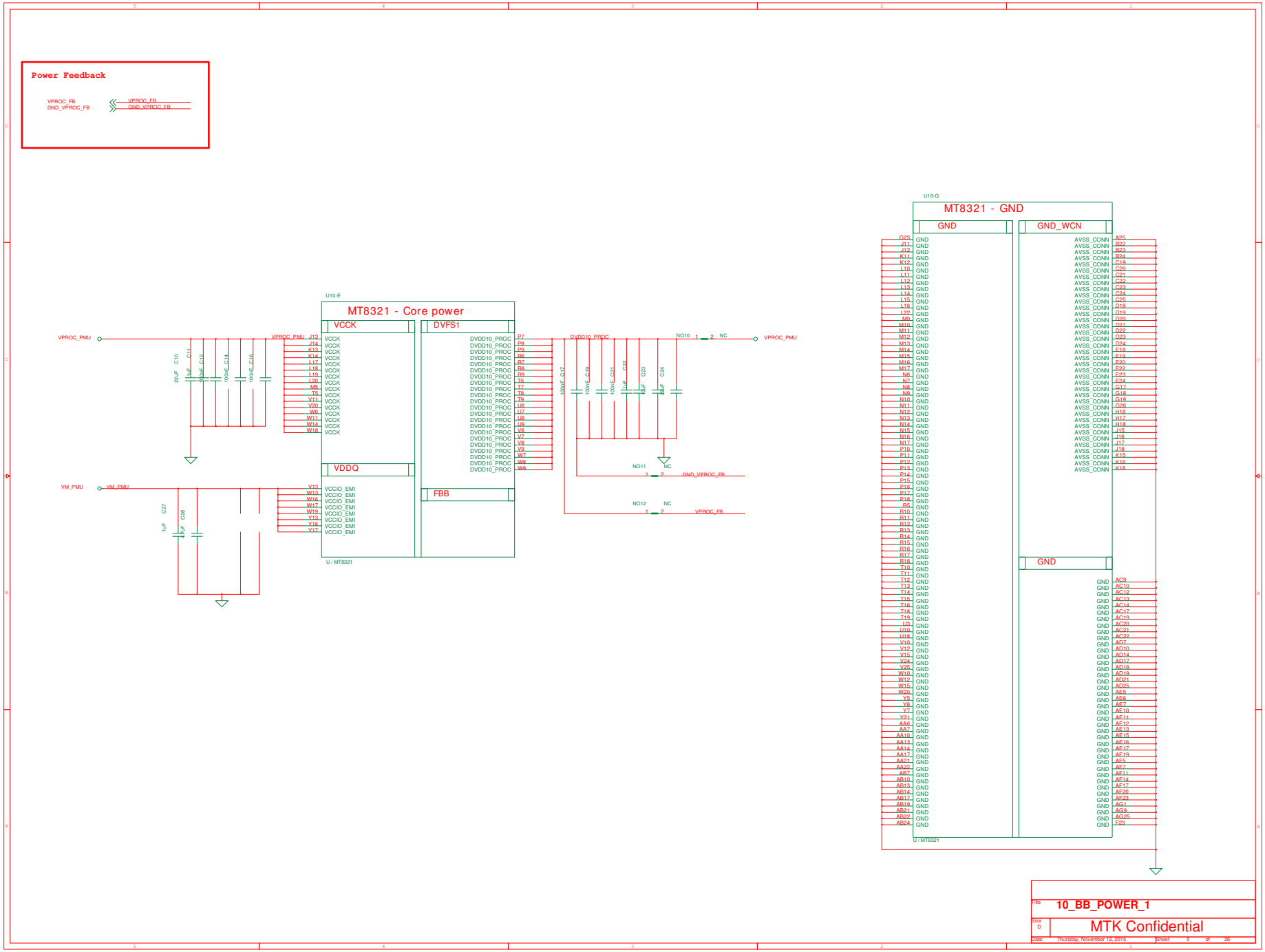

C0402

NC0201_SMD

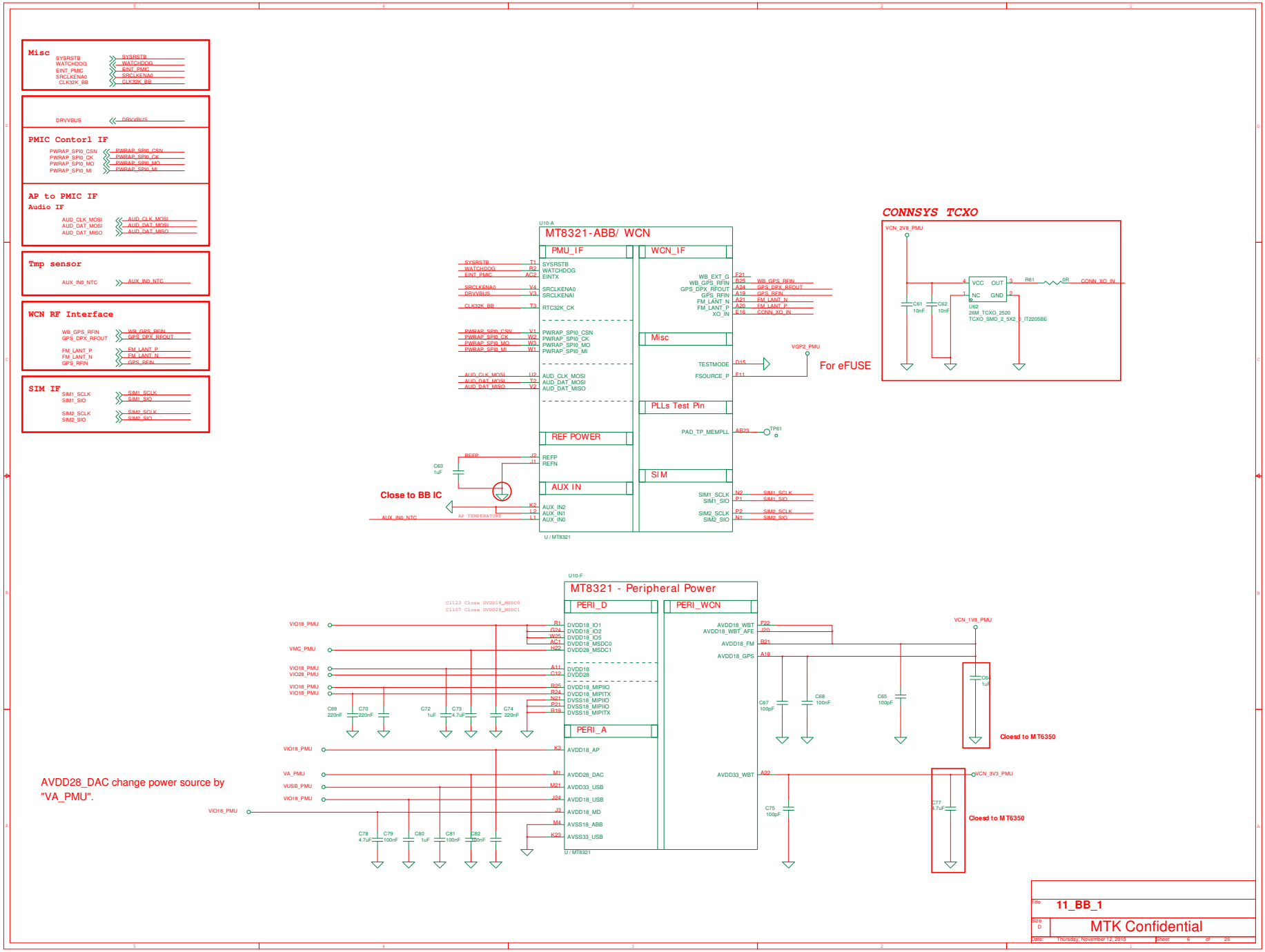

C0402

TCXO_SMD_2_5X2_0_IT2205BE

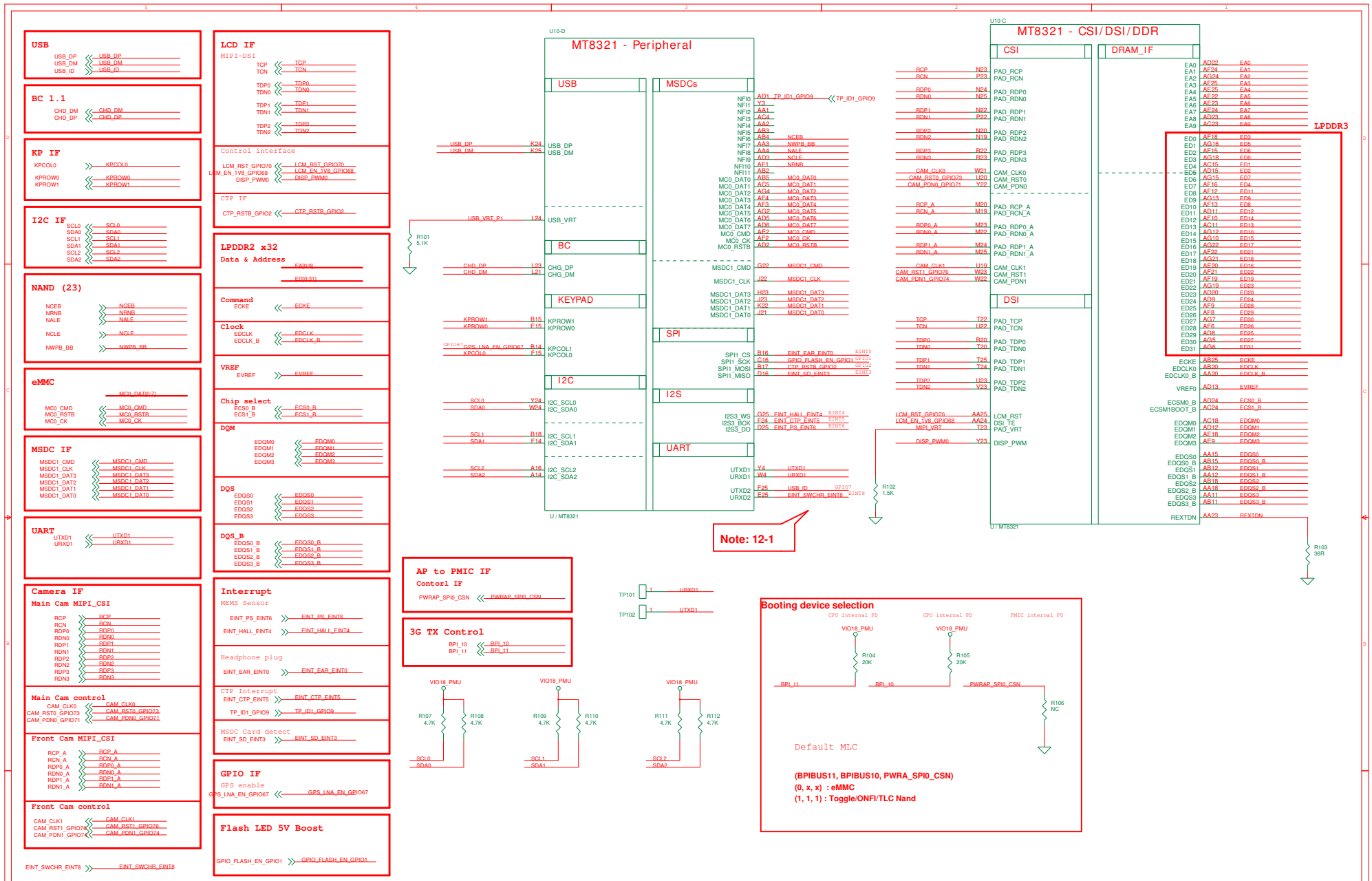

Schematic design notice of "12_BB_2" page.

Note 12-1:

Do not use UART1 as Power solution enable.

Do not use UART2 as power solution enable, if select UART1 as D/L or calibration path,

Title	12_BB_2
Size D	MTK Confidential
Date: Thursday, November 12, 2015	Sheet 7 of 26

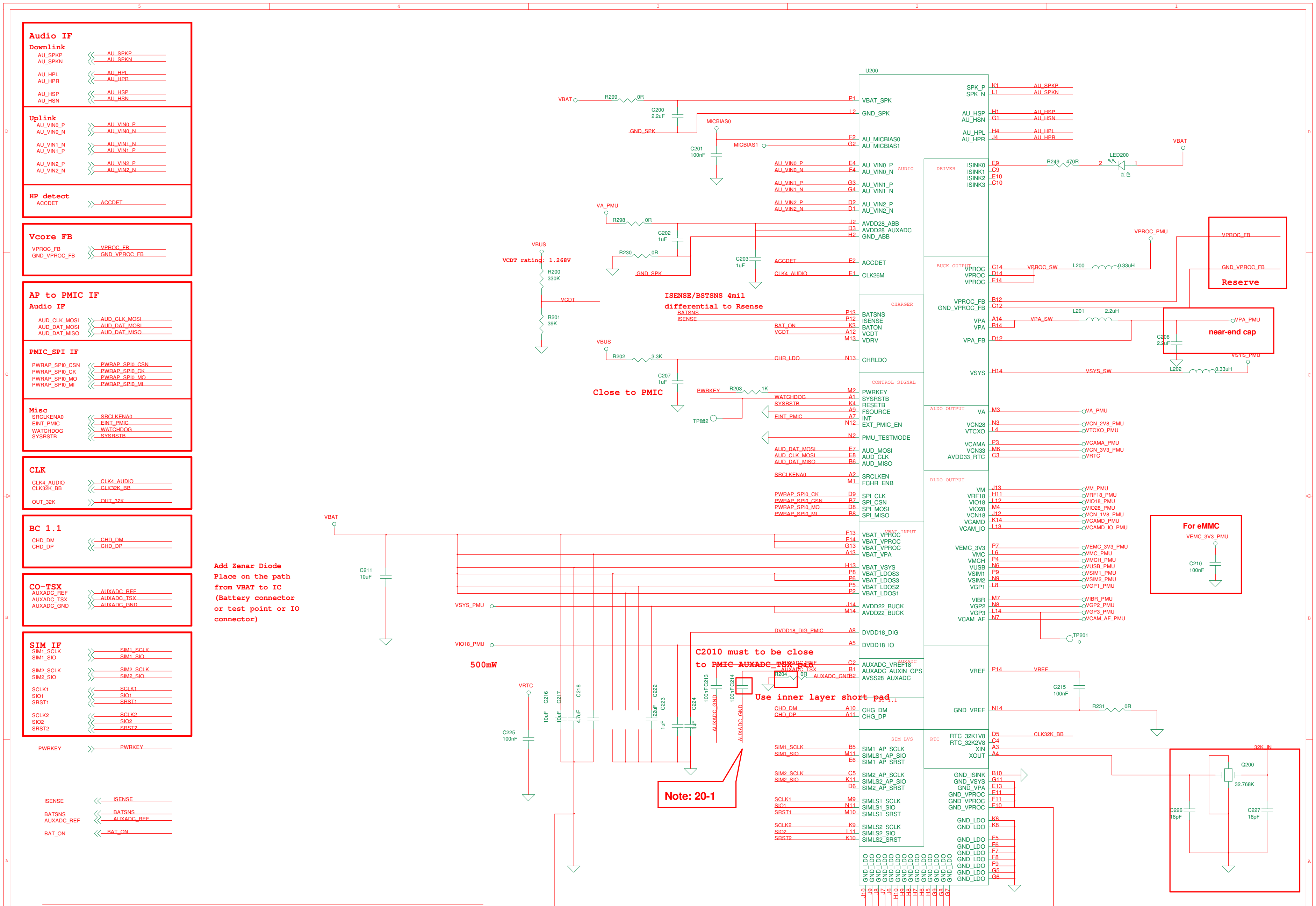

Schematic design notice of "20_Power_MT6350" page.

Note 20-1:

Connect TMS GND (Pin2) to PMIC AUXADC_GND (Pin B2) first.
Then connect to main GND by inner layer short pad (i.e., layer 2).

Title	20_MT6350_PMIC Core
Size D	MTK Confidential
Date: Thursday, November 12, 2015	Sheet 8 of 26

C0603

Charger IF

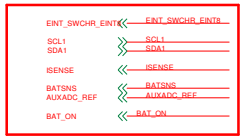

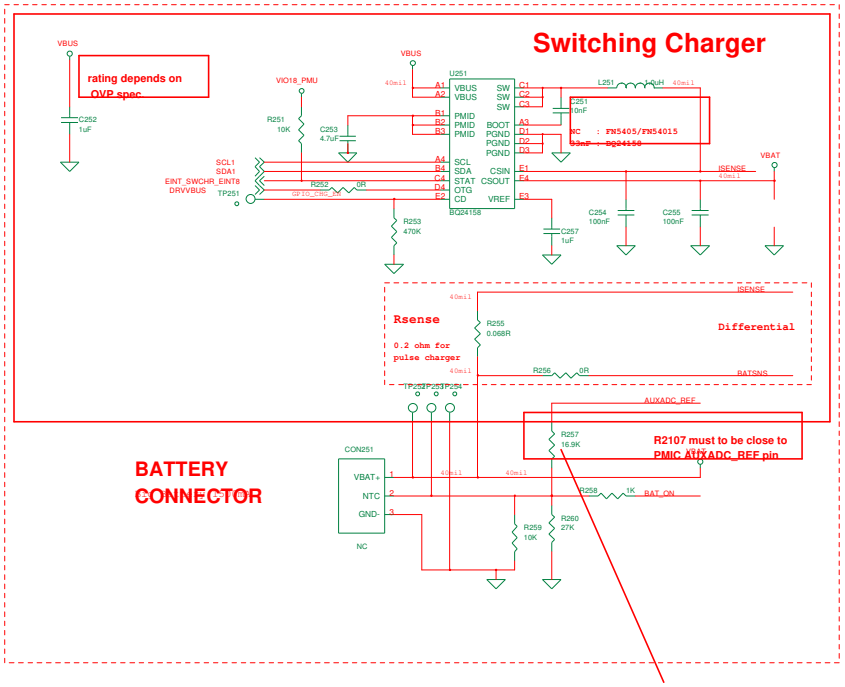

if battery NTC is 10kohm, R310=16.9K, R312=27K
if battery NTC is 47kohm, R310=61.9K, R312=100K
Refer to MT6350 HW design notice

Title	21_Charger
Size D	MTK Confidential
Date: Thursday, November 12, 2015	Sheet 9 of 26

C0402

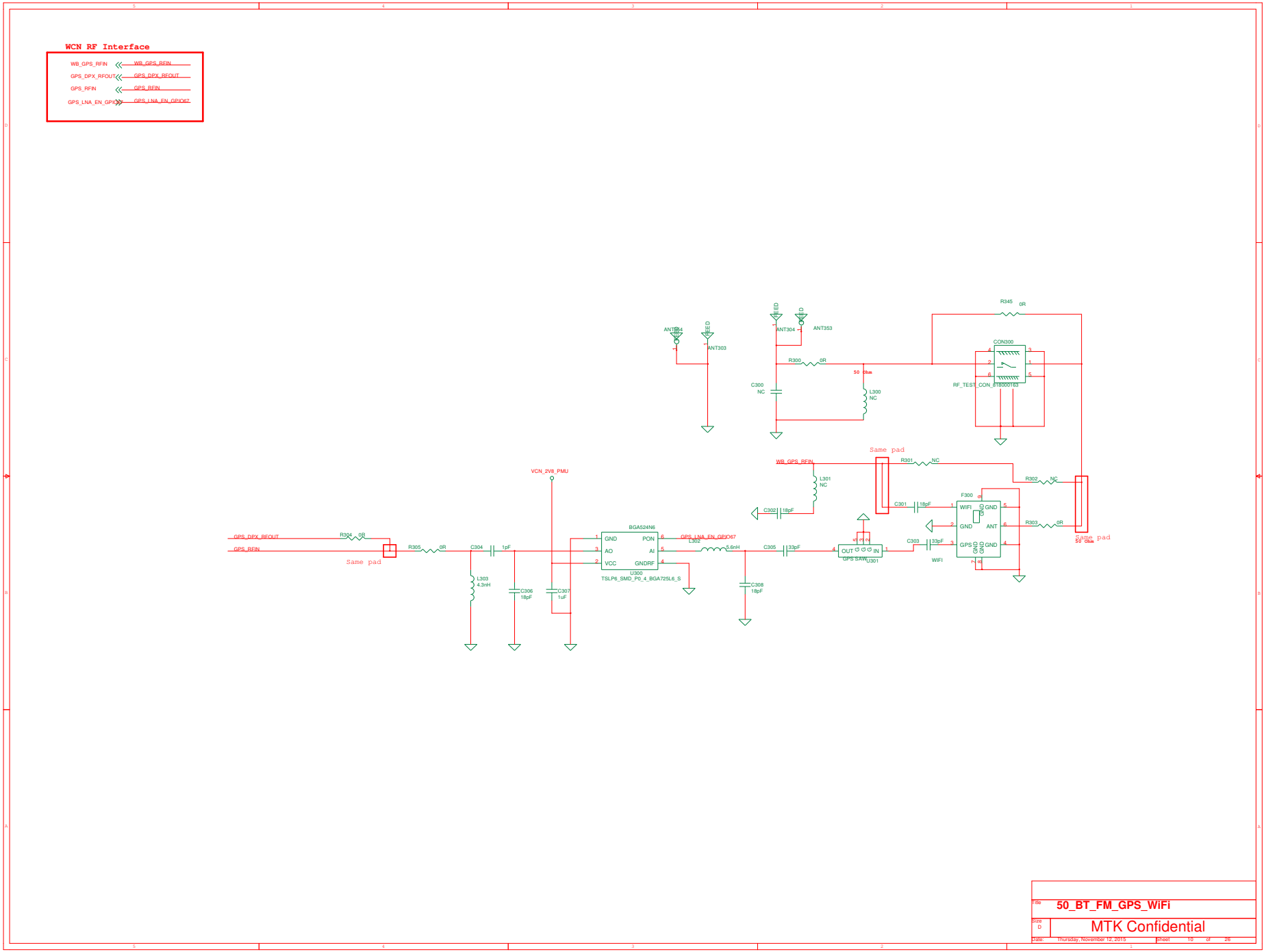

Title	50_BT_FM_GPS_WiFi
Size D	MTK Confidential
Date: Thursday, November 12, 2015	Sheet 10 of 26

C0402

TSLP6_SMD_P0_4_BGA725L6_S

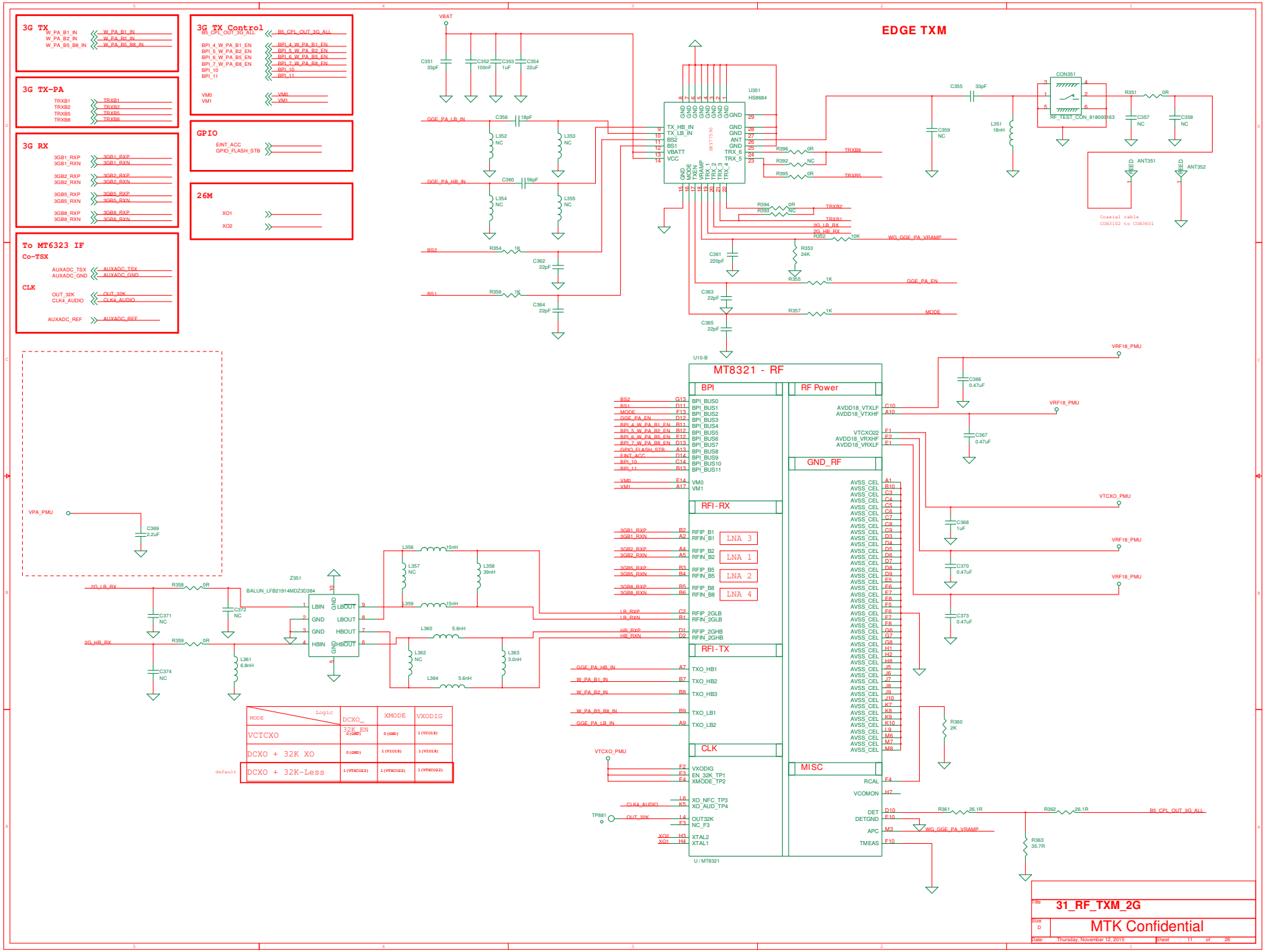

MODE \ Logic	DCXO_32K_EN	XMODE	VXODIG
VCTCXO	0 (GND)	0 (GND)	1 (VIO18)
DCXO + 32K XO	0 (GND)	1 (VIO18)	1 (VIO18)
default DCXO + 32K-Less	1 (VTCXO22)	1 (VTCXO22)	1 (VTCXO22)

C0402

eMMC / MLC Co-Layout

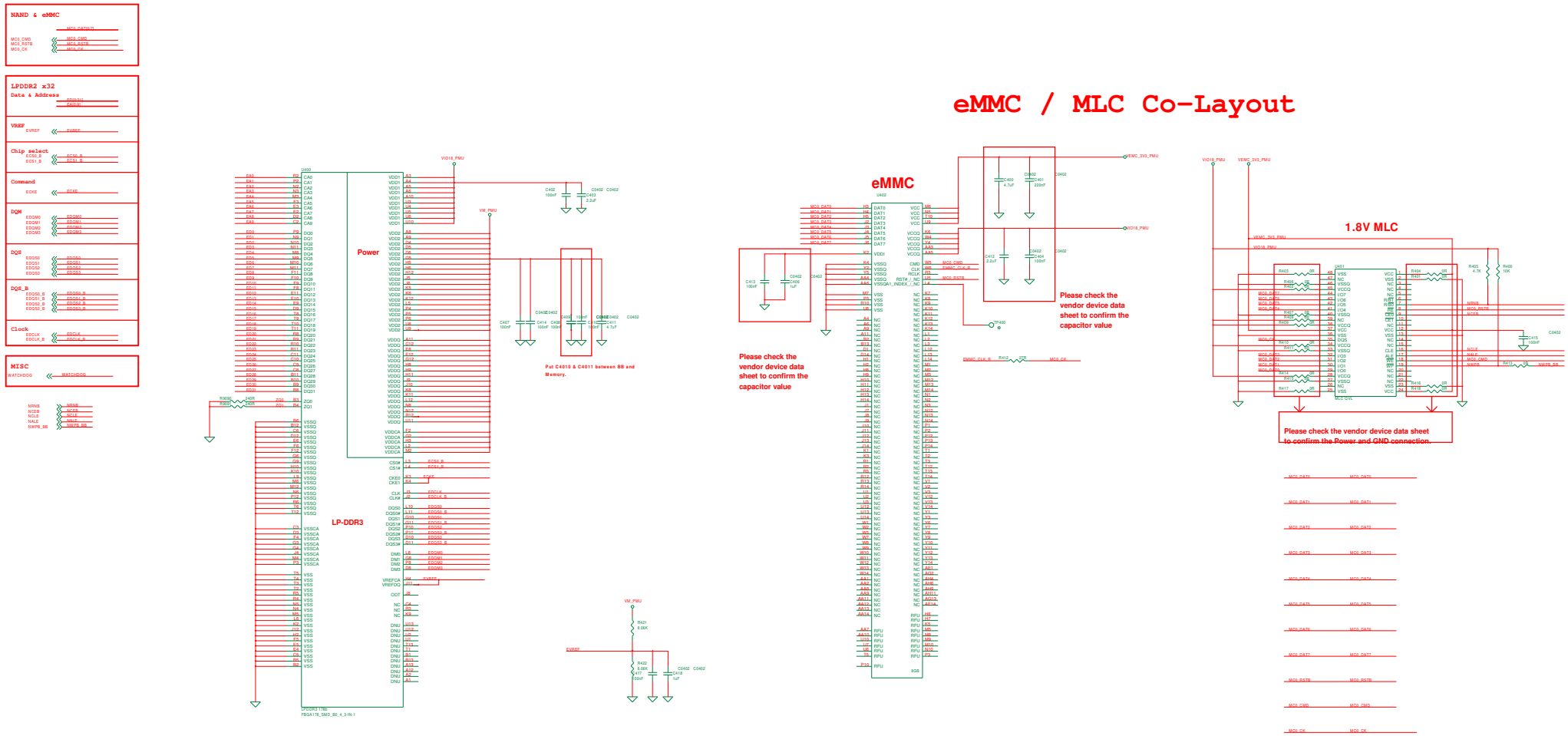

File	40_Memory_eMMC_NAND_LPDDR2
Size	MTK Confidential
Date	Thursday, November 12, 2015
Sheet	12 of 36

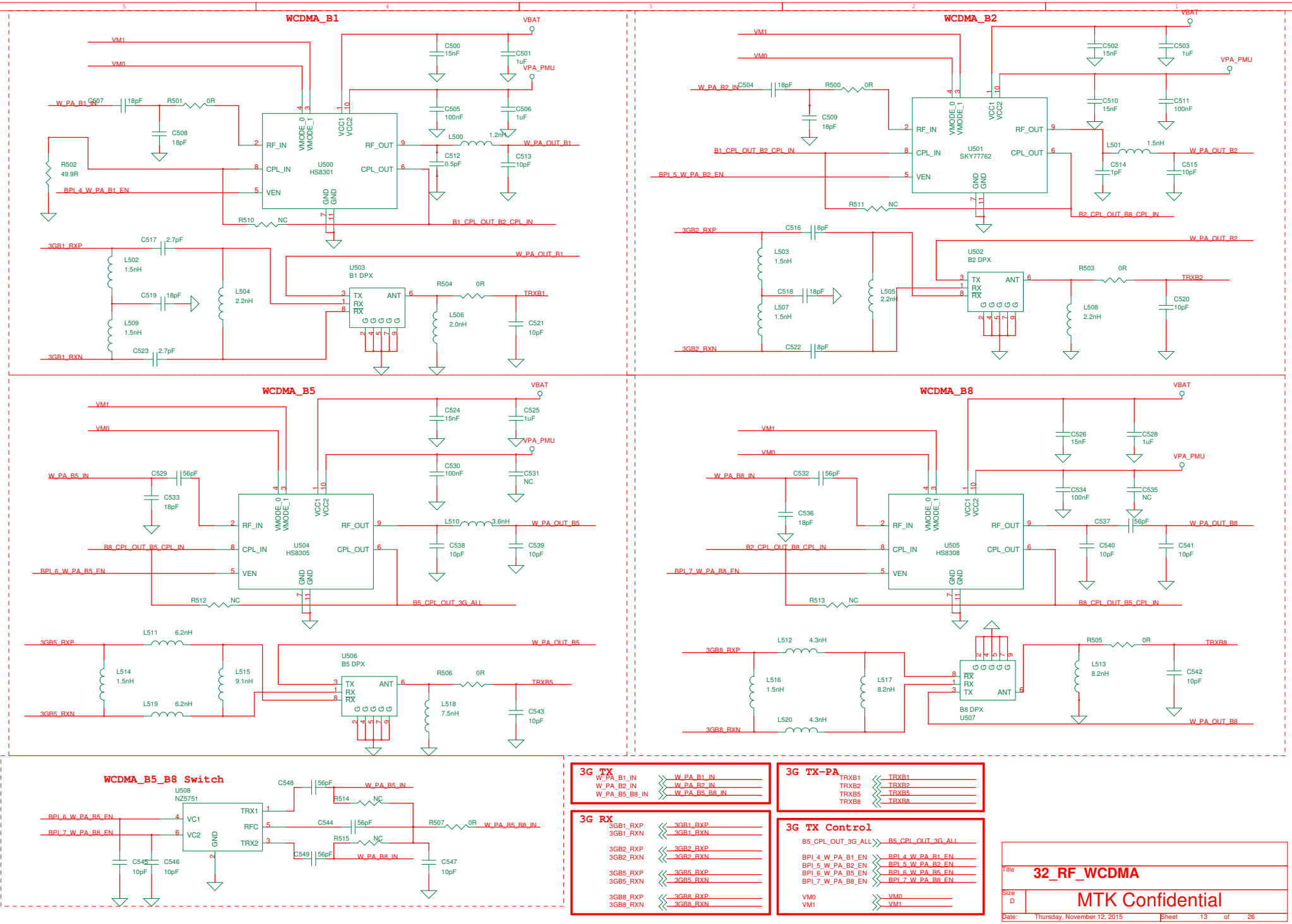

Title: 32_RF_WCDMA

Size: D

MTK Confidential

Date: Thursday, November 12, 2015 Sheet 13 of 26

C0403

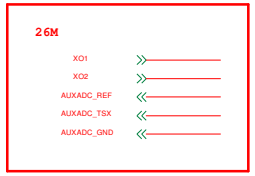

1.Route AUXADC_REF/AUXADC_TSX with 3mil trace width
2.Route AUXADC_REF/AUXADC_TSX as differential trace with well GND shielding
3.Route AUXADC_GND with 15mil trace width under AUXADC_REF/AUXADC_TSX trace to provide return current path

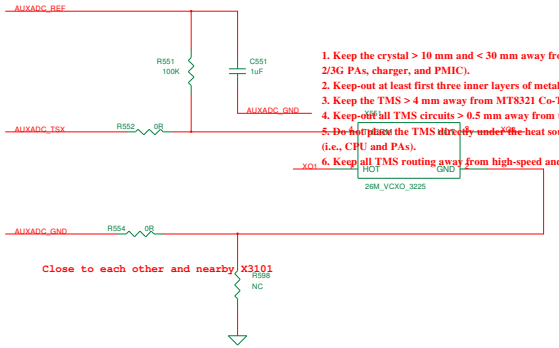

1. Keep the crystal > 10 mm and < 30 mm away from the heat sources (Priority: 2/3G PAs, charger, and PMIC).
2. Keep-out at least first three inner layers of metal for all TMS circuits.
3. Keep the TMS > 4 mm away from MT8321 Co-TMS.
4. Keep-out all TMS circuits > 0.5 mm away from the surrounding metal.
5. Do not place the TMS directly under the heat sources that on the opposite side (i.e., CPU and PAs).
6. Keep all TMS routing away from high-speed and power traces.

Title	33_RF_Clock
Size D	MTK Confidential
Date: Thursday, November 12, 2015	Sheet 14 of 26

C0402

Flash LED 5V Boost

GPIO_FLASH_STB — GPIO_FLASH_STB
GPIO_FLASH_EN_GPIO1 — GPIO_FLASH_EN_GPIO1
SCL2 — SCL2
SDA2 — SDA2

LCM Backlight Driver

LCM_LEDA — LCM_LEDA
LCM_LEDK — LCM_LEDK
DISP_PWM0 — DISP_PWM0

Flash LED 5V Boost

Flash LED I2C address: 0X63 (Write:0xC6, Read:0xC7)

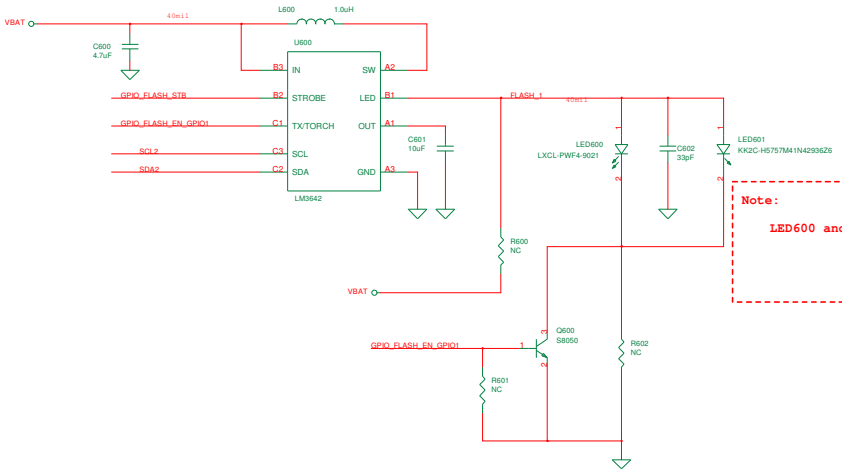

Note:

LED600 and LED601 dual layout!!

Title	23_POWER_THIRD PARTY
Size D	MTK Confidential
Date: Thursday, November 12, 2015	Sheet 16 of 26

C0402

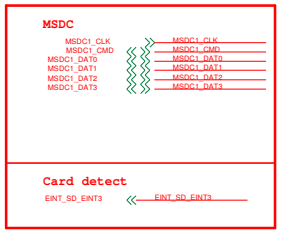

SD CARD

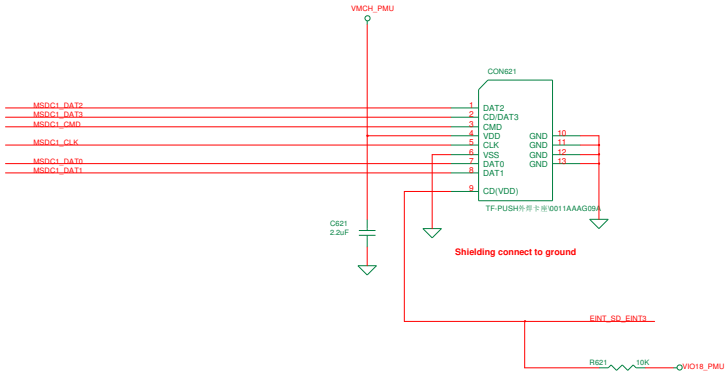

Based on your system level design , if better ESD/desense performance is needed on your system.

Schematic design notice of "41_MEMORY_SD Card" page.

Note 41-1:
The equivalent capacitance of ESD protection device must be <=1pF
-- otherwise it will result in NFC card mode function fail.

Note 41-2: Depends on system design to add ESD protection componemt or not.

Title	41_MEMORY_SD Card
Size D	MTK Confidential
Date: Thursday, November 12, 2015	Sheet 17 of 26

C0402

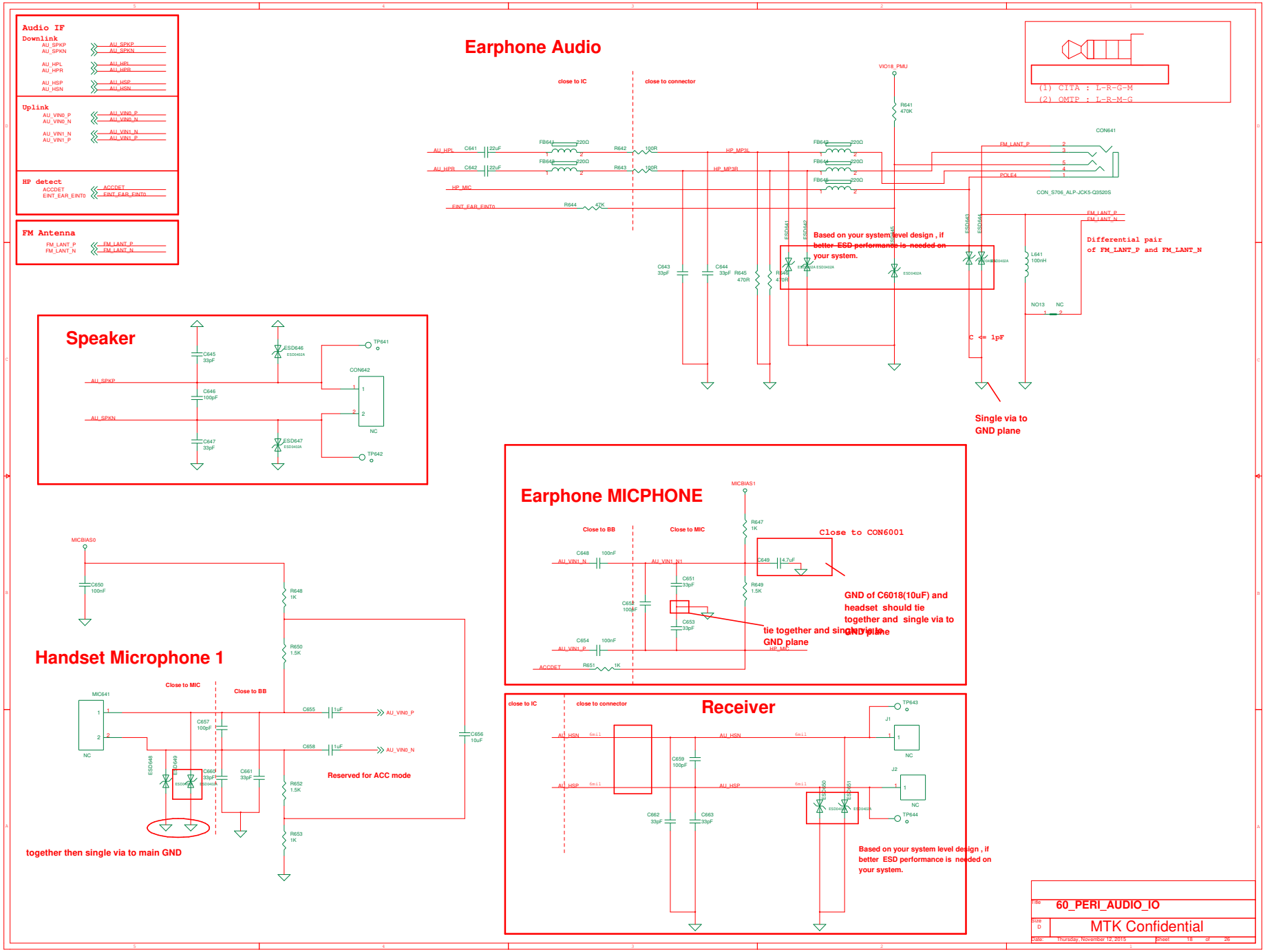

C0402
ESD0402A
NC0201_SMD

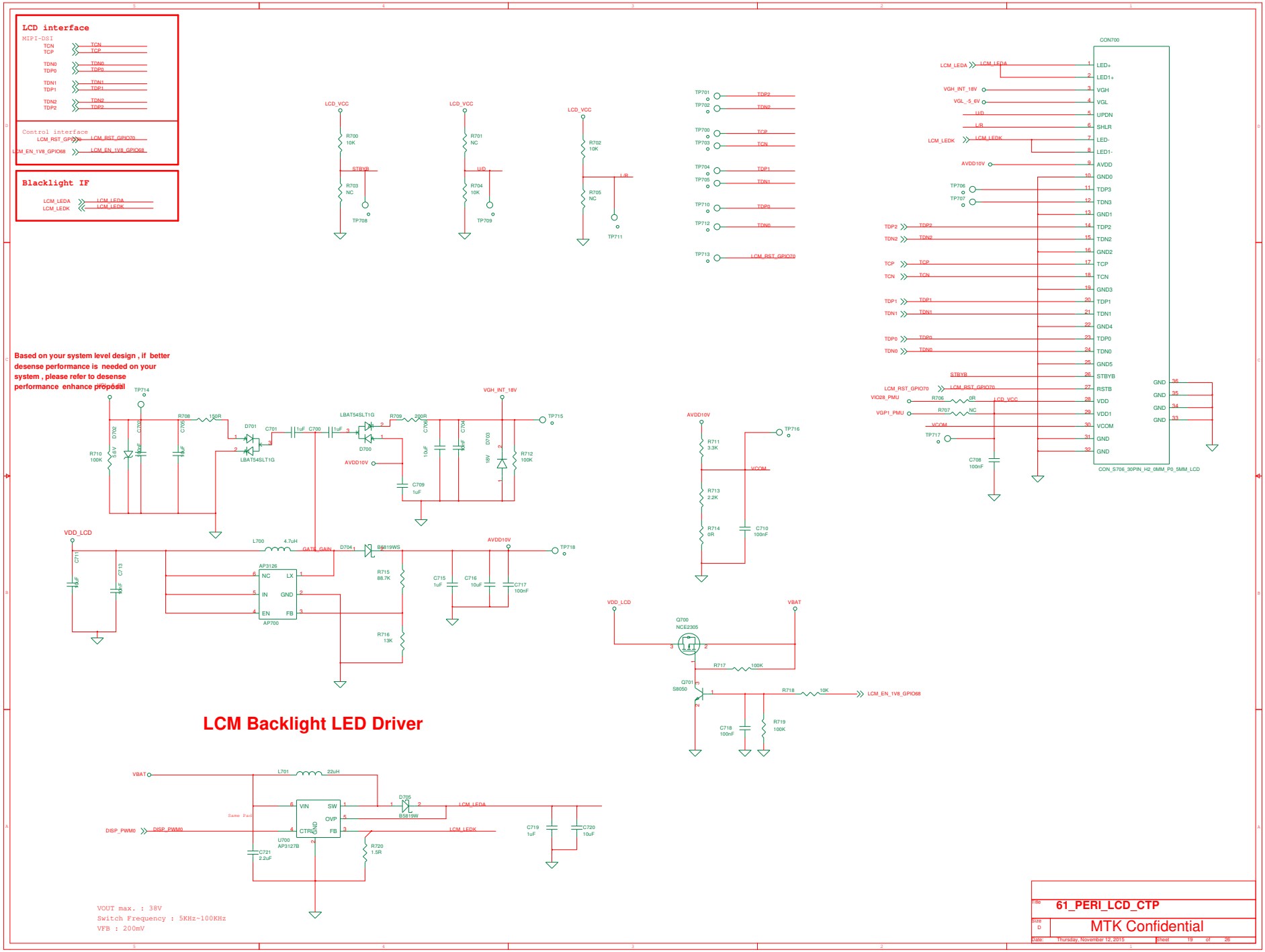

LCM Backlight LED Driver

Title	61_PERI_LCD_CTP
Size D	MTK Confidential
Date: Thursday, November 12, 2015	Sheet 19 of 26

C0608

Camera IF

Main Cam MIPI_CSI

RCN — RCN
RCP — RCP
RDN0 — RDN0
RDP0 — RDP0
RDN1 — RDN1
RDP1 — RDP1

Main Cam control

CAM_PDN0_GPIO71 — CAM_PDN0_GPIO71
CAM_RST0_GPIO73 — CAM_RST0_GPIO73
CAM_CLK0 — CAM_CLK0

Front Cam MIPI_CSI

RCP_A — RCP_A
RCN_A — RCN_A
RDP0_A — RDP0_A
RDN0_A — RDN0_A

Front Cam control

CAM_CLK1 — CAM_CLK1
CAM_PDN1_GPIO74 — CAM_PDN1_GPIO74

CAM I2C

SCL0 — SCL0
SDA0 — SDA0

Rear camera (IMX179) I2C address: 0X10 (Write:0x20, Read:0x21)
AF driver (F8N03C) I2C address: 0x0C (Write:0x18 , Read:0x19)

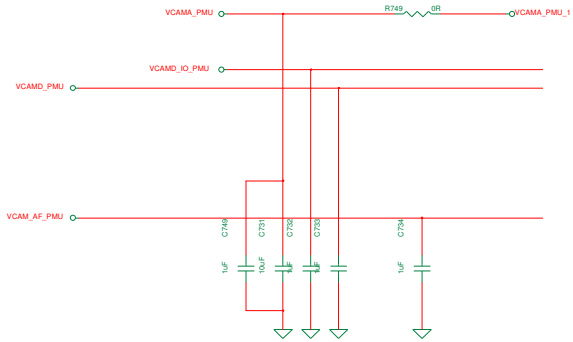

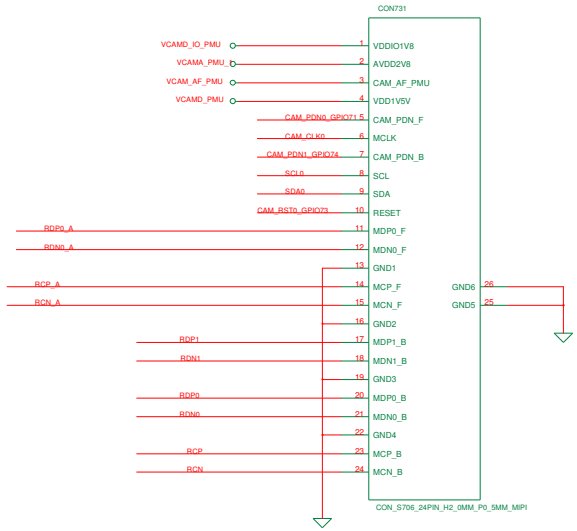

Title	62_PERI_CAMERA
Size D	MTK Confidential
Date: Thursday, November 12, 2015	Sheet 20 of 26

C0402

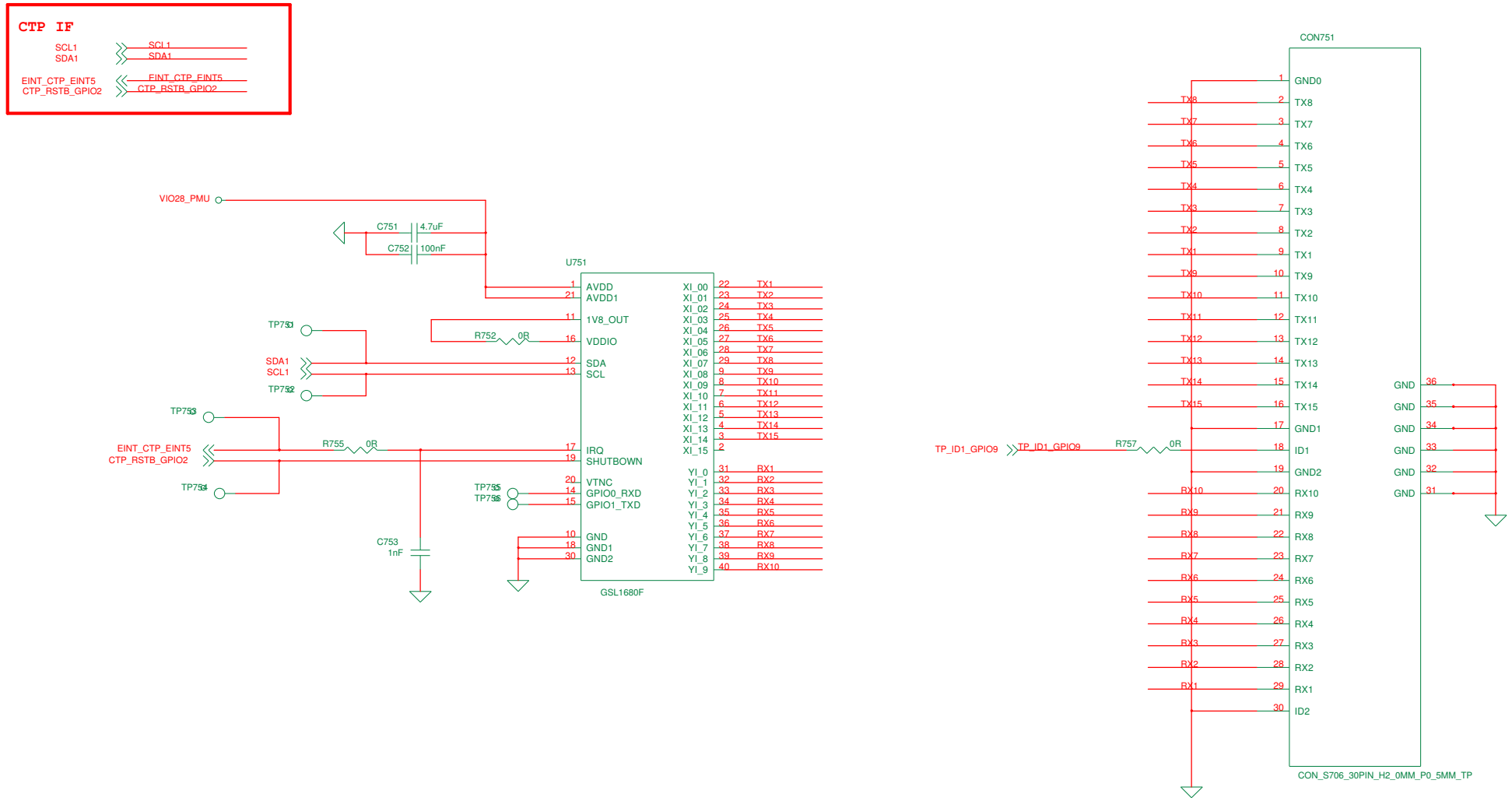

Title **62_PERI_CAMERA**

Size D

MTK Confidential

Date: Thursday, November 12, 2015 Sheet 21 of 26

C0402

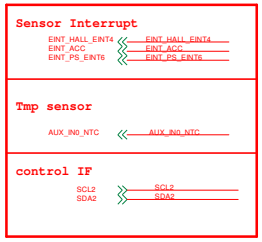

PS Sensor

CM36652 / RGB + PS I2C address: 0X60 (Write:0xC0, Read:0xC1)

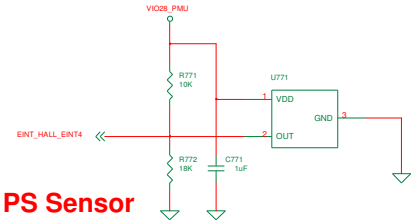

Accelerometer

MC3233 / Accelerometer I2C address: 0x4C (Write:0x98, Read:0x99)

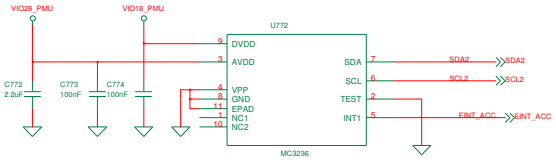

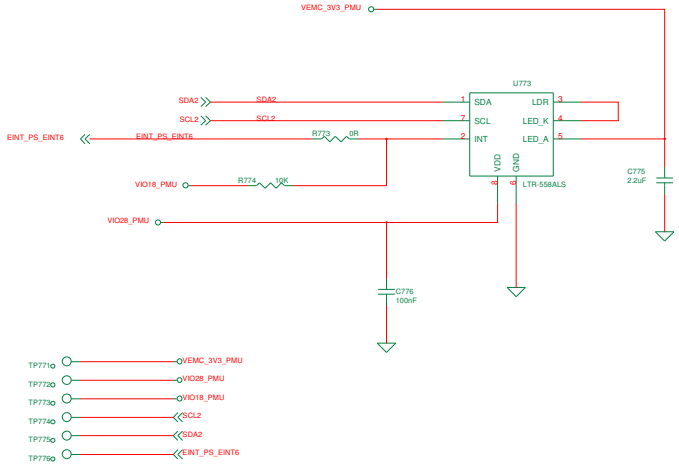

Thermistor / To sense board level temperature

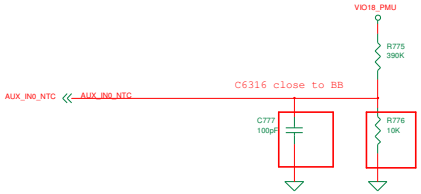

NTC6301 close to BB ,and located in the same layer
(can refer to thermal design notice)

Title	63_PERI_SENSORS
Size D	MTK Confidential
Date: Thursday, November 12, 2015	Sheet 22 of 26

C0402

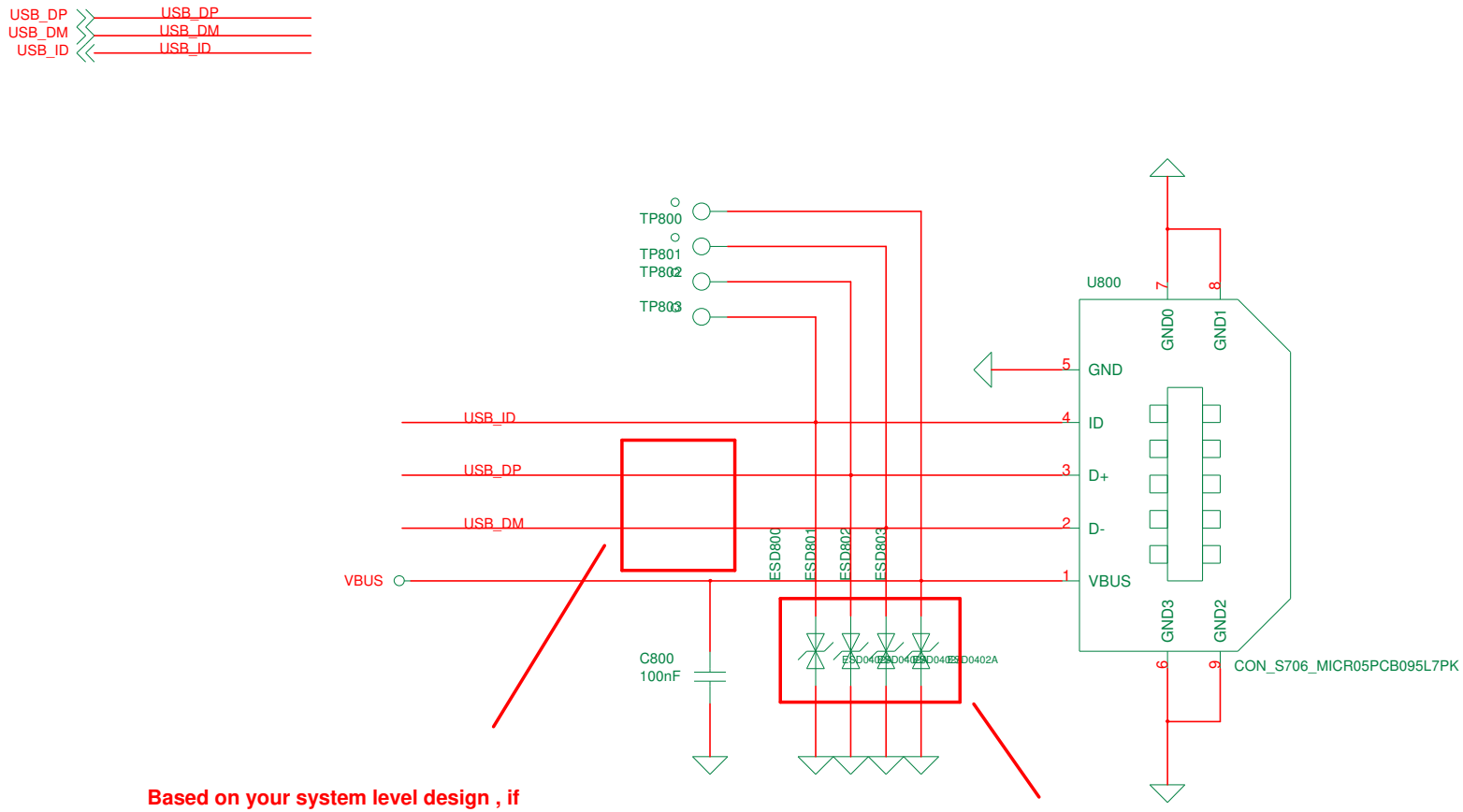

Title	64_PERI_USB_MHL
Size D	MTK Confidential
Date: Thursday, November 12, 2015	Sheet 23 of 26

C0402

ESD0402A

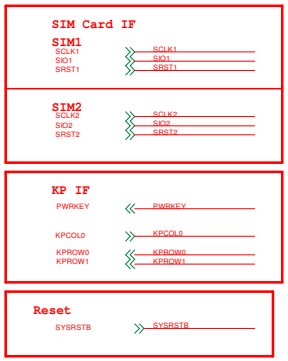

SIM1

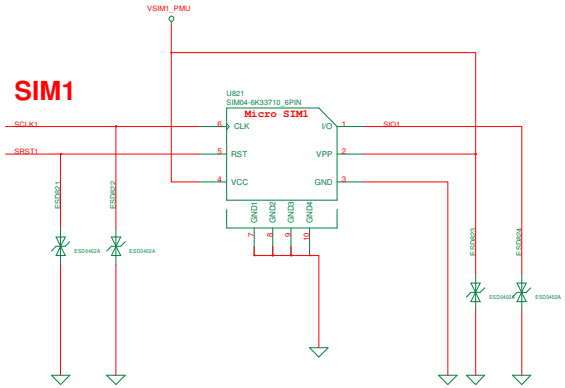

Based on your system level design , if better ESD performance is needed on your system.

SIM2

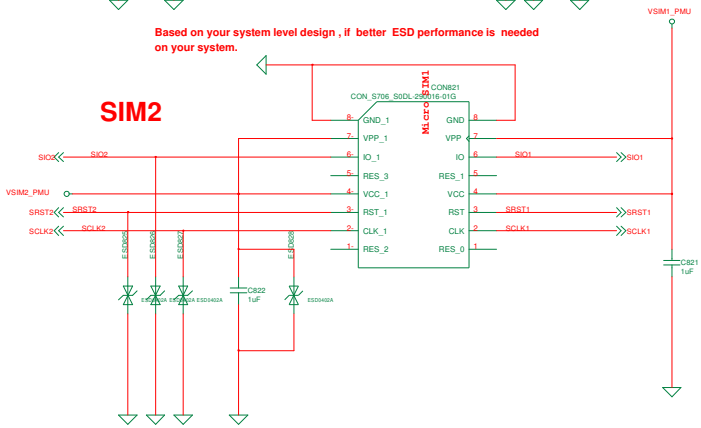

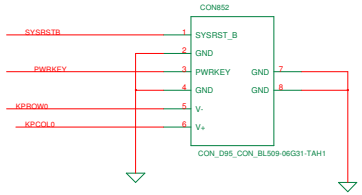

RESET KEY

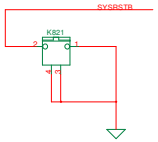

Power Key

DO NOT put pull-up resistor on PWRKEY

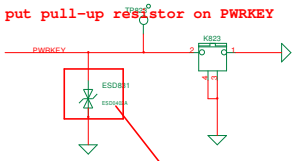

Volume Up

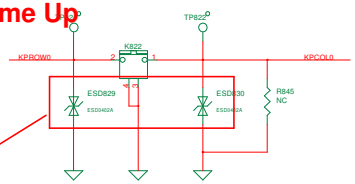

Volume Down

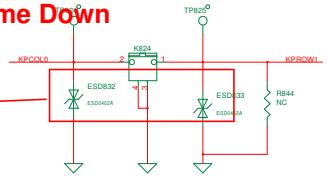

	KCOL0	KCOL1
KROW0	Up	
KROW1	Down	

Based on your system level design , if better ESD performance is needed on your system , please refer to ESD performance enhance proposal

Title	65_PERI_Dual_SIM_ICUSB_KEYPAD
Size D	MTK Confidential
Date: Thursday, November 12, 2015	Sheet 24 of 28

C0603

VIBRATOR

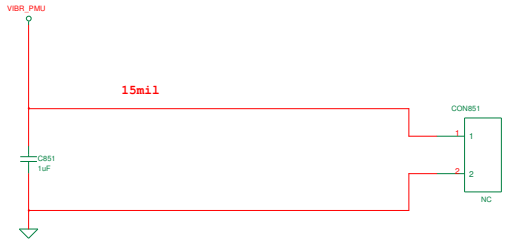

Title	66_PERI_VIBRATOR
Size D	MTK Confidential
Date: Thursday, November 12, 2015	Sheet 25 of 26

C0402

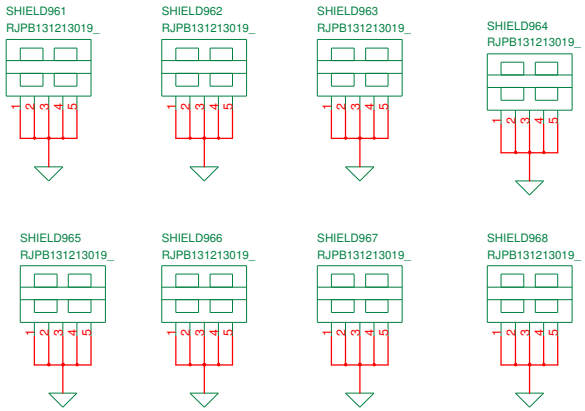

JTAG

KP IF

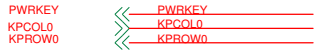

SIM1

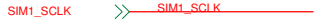

UART

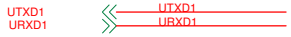

for debug ONLY

(SIM1_SCLK , AUD_CLK_MOSI)
(0, 0) : Normal function
(0, 1) : SPI1
(1, 0) : MSDC1
(1, 1) : CAM

Title	**90_DEBUG_IO**
Size D	MTK Confidential
Date: Thursday, November 12, 2015	Sheet 26 of 26