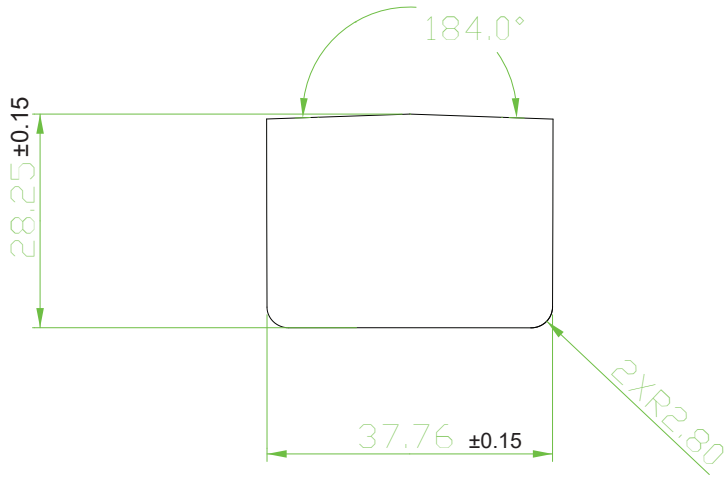

Wistron Corporation

MODEL NO.: QA660_MC930P	UNIT : mm			
PART NAME: 140.04211.0051	SCALE: 1 : 1	REV	DESCRIPTION	SIGN DATE
A/W NO.: LABEL SPEC_US + Canada	SHEET 1 OF 1			

1. MATERIAL: WHITE POLYESTER (T=0.075mm) +0.05mm (FSK.)
2. THE MATERIAL MUSE BE APPROVED BY ZEBRA
3. ADHESIVE: 压花胶
4. PRINT COLOR:LETTERS----------PANTONE COOL GRAY 9C
   BACKGROUND----------BLACK
   ZEBRA LOGO----------PANTONE 877C
5. PRINT TOLERANCE OF DIMENSION: +0mm/-0.2mm

DRAWN: 2M0CD0 Victor Shih 2/25/2019	REVIEWED:	APPROVED: 2M0CD0 Steven Chuang 2/25/2019