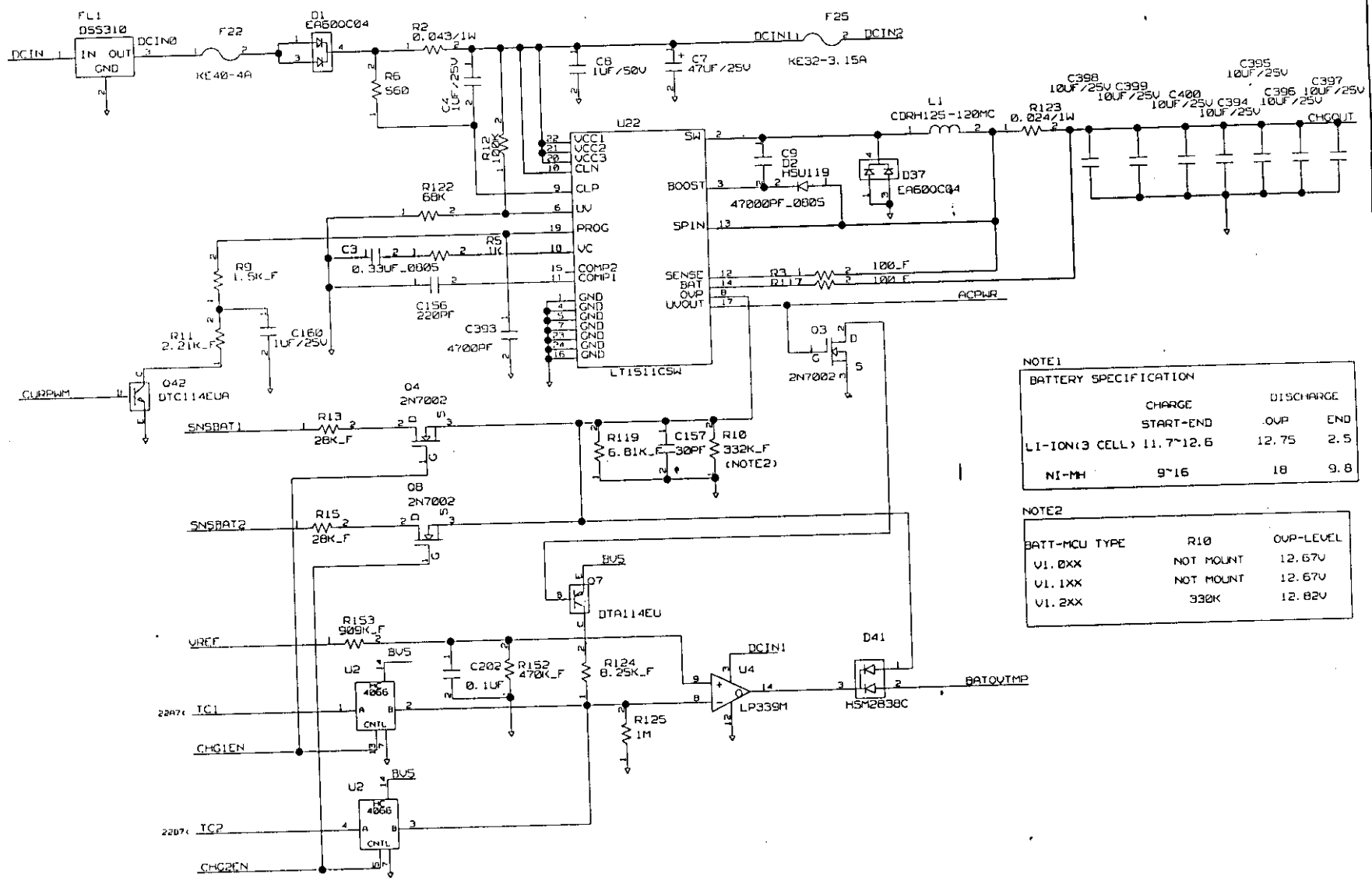

NOTE1

BATTERY SPECIFICATION

	CHARGE START-END	DISCHARGE OVP	DISCHARGE END
LI-ION(3 CELL)	11.7~12.6	12.75	2.5
NI-MH	9~16	18	9.8

NOTE2

BATT-MCU TYPE	R10	OVP-LEVEL
V1.0XX	NOT MOUNT	12.67V
V1.1XX	NOT MOUNT	12.67V
V1.2XX	330K	12.82V

TATUNG CO. COMPUTER R&D DIV.	PCB: N5900 R00D	TITLE: PROGRAM CHARGER & BATTERY DETECT	DATE: 02/09/1998	PAGE: 1 OF 30

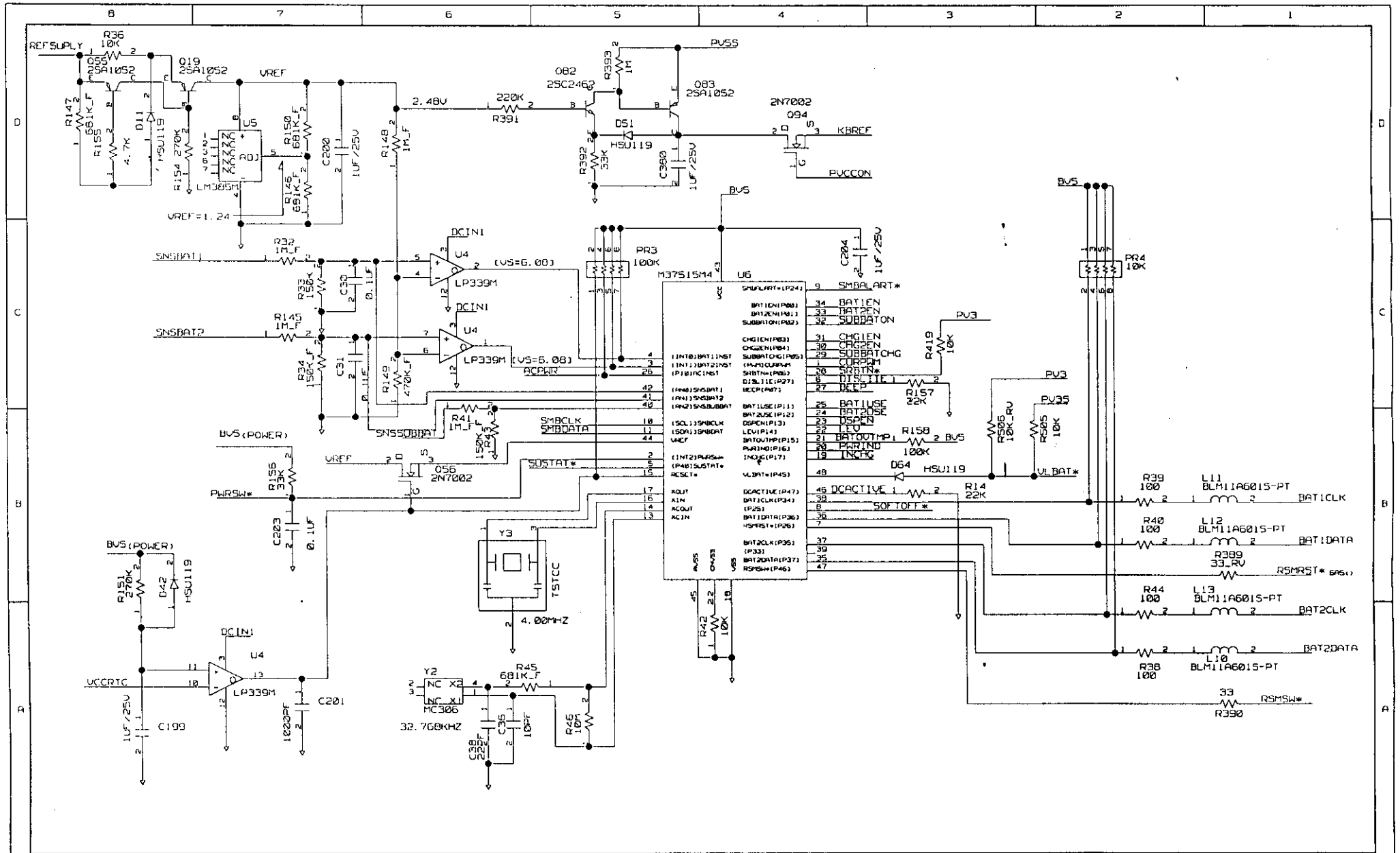

TATUNG CO. COMPUTER R&D DIV.	PCB: N5900 R00D	TITLE: BATTERY CONTROL	DATE: 02/09/1998	PAGE: 2 OF 30

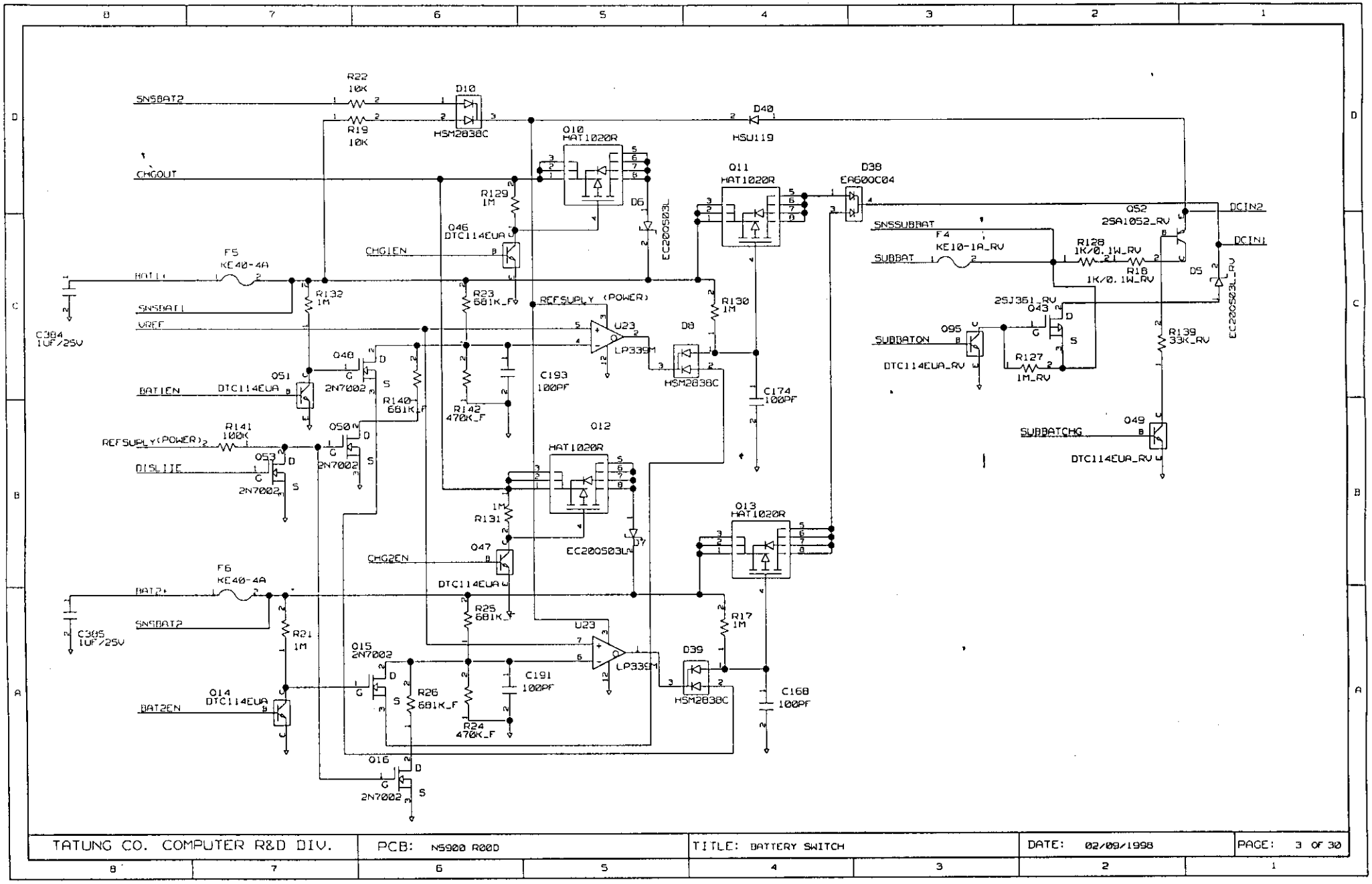

TATUNG CO. COMPUTER R&D DIV.	PCB: N5900 R00D	TITLE: BATTERY SWITCH	DATE: 02/09/1998	PAGE: 3 OF 30

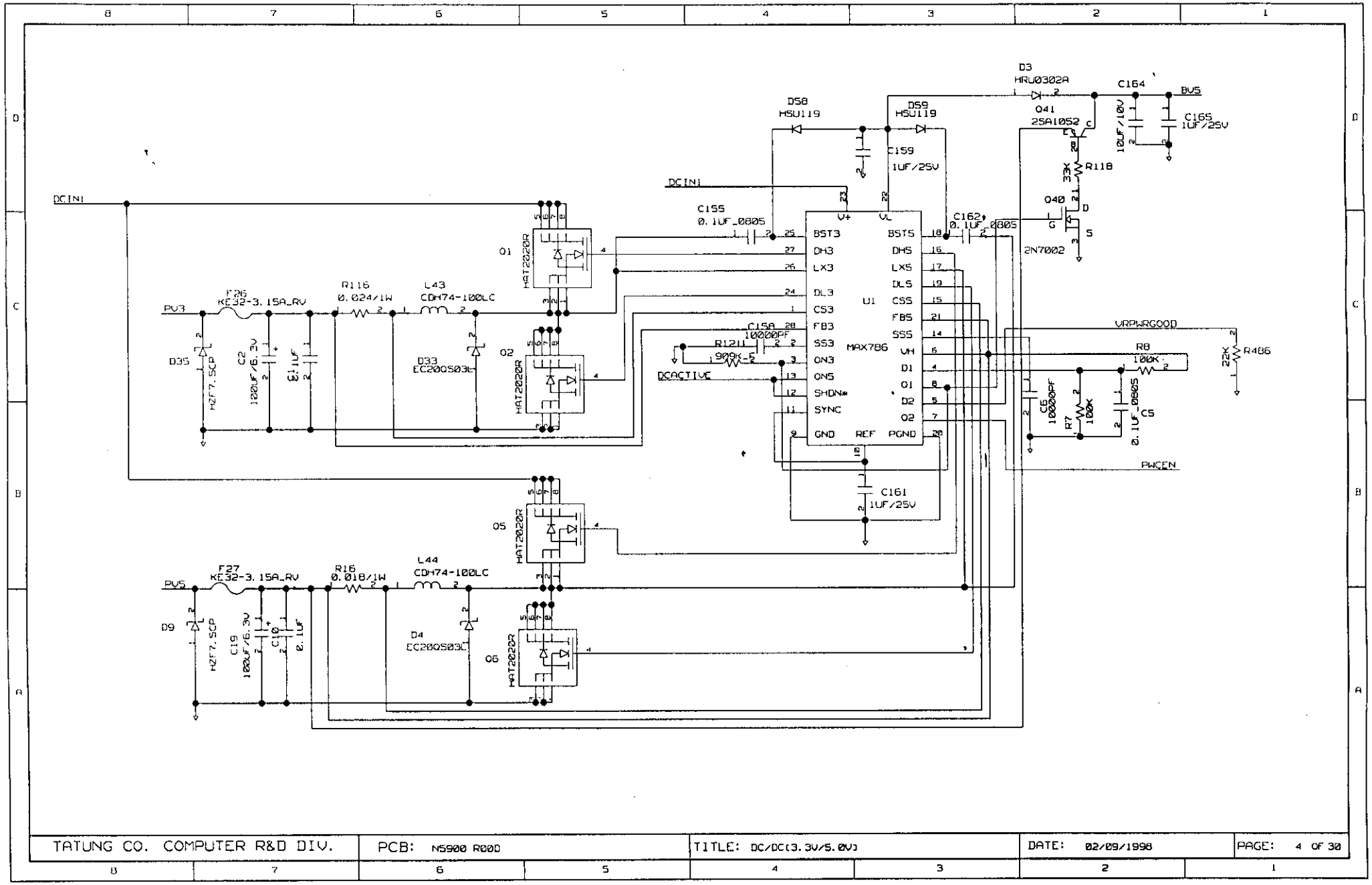

TATUNG CO. COMPUTER R&D DIV.	PCB: N5900 R00D	TITLE: DC/DC(3.3V/5.0V)	DATE: 02/09/1998	PAGE: 4 OF 30

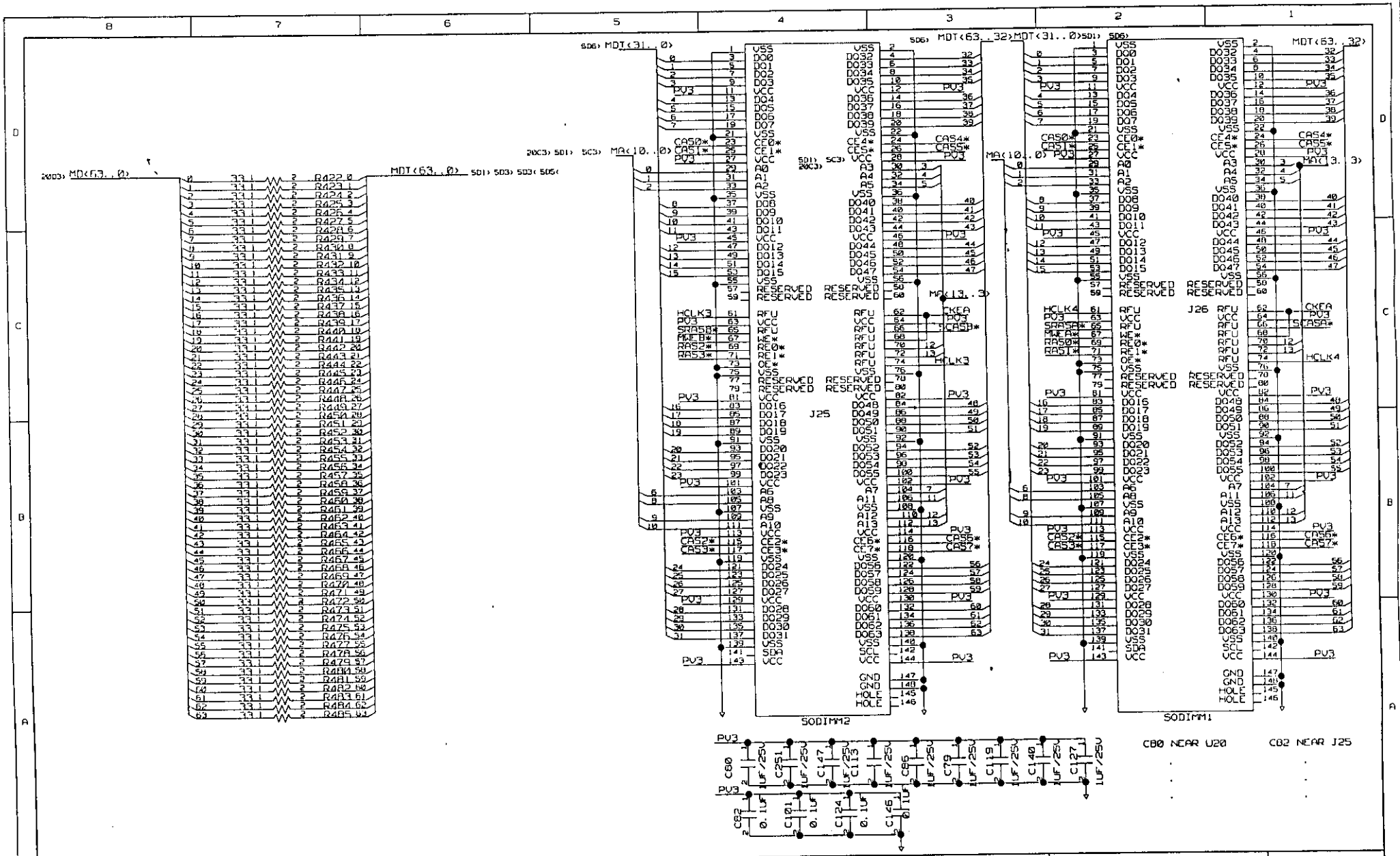

TATUNG CO. COMPUTER R&D DIV.	PCB: N5900 R00D	TITLE: MEMORY BANK 0/DIMM-SLOT	DATE: 02/09/1998	PAGE: 5 OF 30

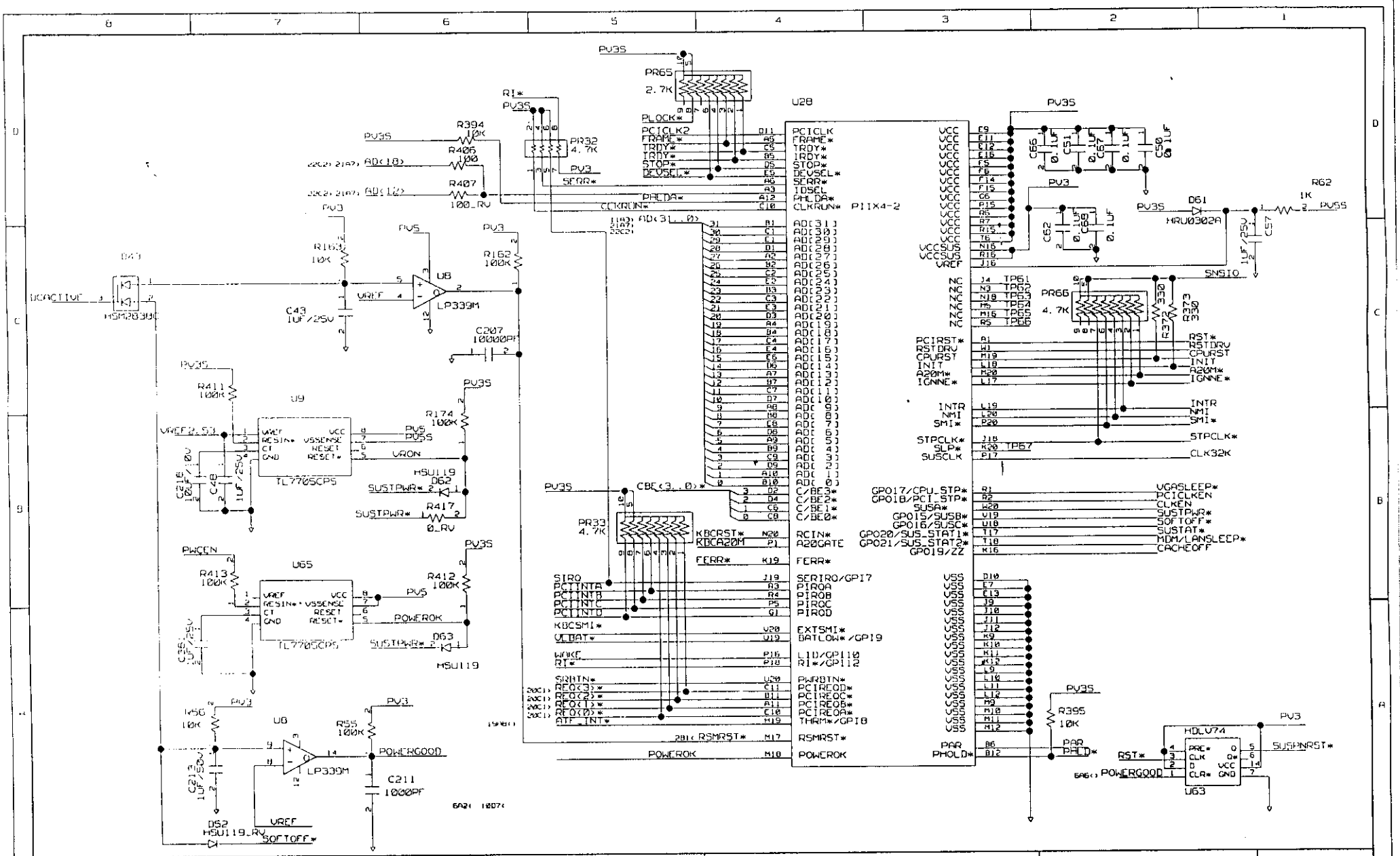
U28
PIIX4-2
PCICLK
FRAME*
TRDY*
STOP*
DEVSEL*
SERR*
IDSEL
PHLDA*
CLKRUN*
AD[31..0]
C/BE[3..0]*
KBCRST*
RDCA20M
A20GATE
FERR*
SERIRQ/GPI7
PIRQA
PIRQB
PIRQC
PIRQD
EXTSMI*
BATLOW*/GPI9
LID/GPI10
RI*/GPI12
PWRBTN*
PCIREQD*
PCIREQC*
PCIREQB*
PCIREQA*
THRM*/GPI8
RSMRST*
POWEROK
VCCSUS
VREF
PCIRST*
RSTDRV
CPURST
INIT
A20M*
IGNNE*
INTR
NMI
SMI*
STPCLK*
SLP*
SUSCLK
GPO17/CPU_STP*
GPO18/PCI_STP*
SUSA*
GPO15/SUSB*
GPO16/SUSC*
GPO20/SUS_STAT1*
GPO21/SUS_STAT2*
GPO19/ZZ
VGASLEEP*
PCICLKEN
CLKEN
SUSTPWR*
SOFTOFF*
SUSTAT*
MDM/LANSLEEP*
CACHEOFF
PAR
PHOLD*
PARD*
PV3S
PV3
PV5
PV5S
PR65
2.7K
PR32
4.7K
PR33
4.7K
PR66
4.7K
R394
10K
R406
100
R407
100_RV
R163
10K
R162
100K
C43
1UF/25V
C207
10000PF
U8
LP339M
D43
HSM0330C
DCACTIVE
U9
TL7705CPS
R411
100K
R174
100K
C216
10UF/10V
C48
1UF/25V
D62
HSU119
SUSTPWR*
R417
0_RV
U65
R413
100K
R412
100K
C35
1UF/25V
D63
PWGEN
POWEROK
R56
10K
R55
100K
C213
1UF/50V
C211
1000PF
D52
HSU119_RV
SOFTOFF*
POWERGOOD
VREF
R395
10K
U63
HDLV74
SUSPNRST*
RST*
D61
MRU0302A
R62
1K
C57
1UF/25V
SNSIO
TP61
TP62
TP63
TP64
TP65
TP66
TP67
C66
C51
C62
C68
C50
0.1UF
R330
R373
R372
R374
TATUNG CO. COMPUTER R&D DIV.
PCB: N5900 R00D
TITLE: PIIX4-1
DATE: 02/09/1998
PAGE: 6 OF 30

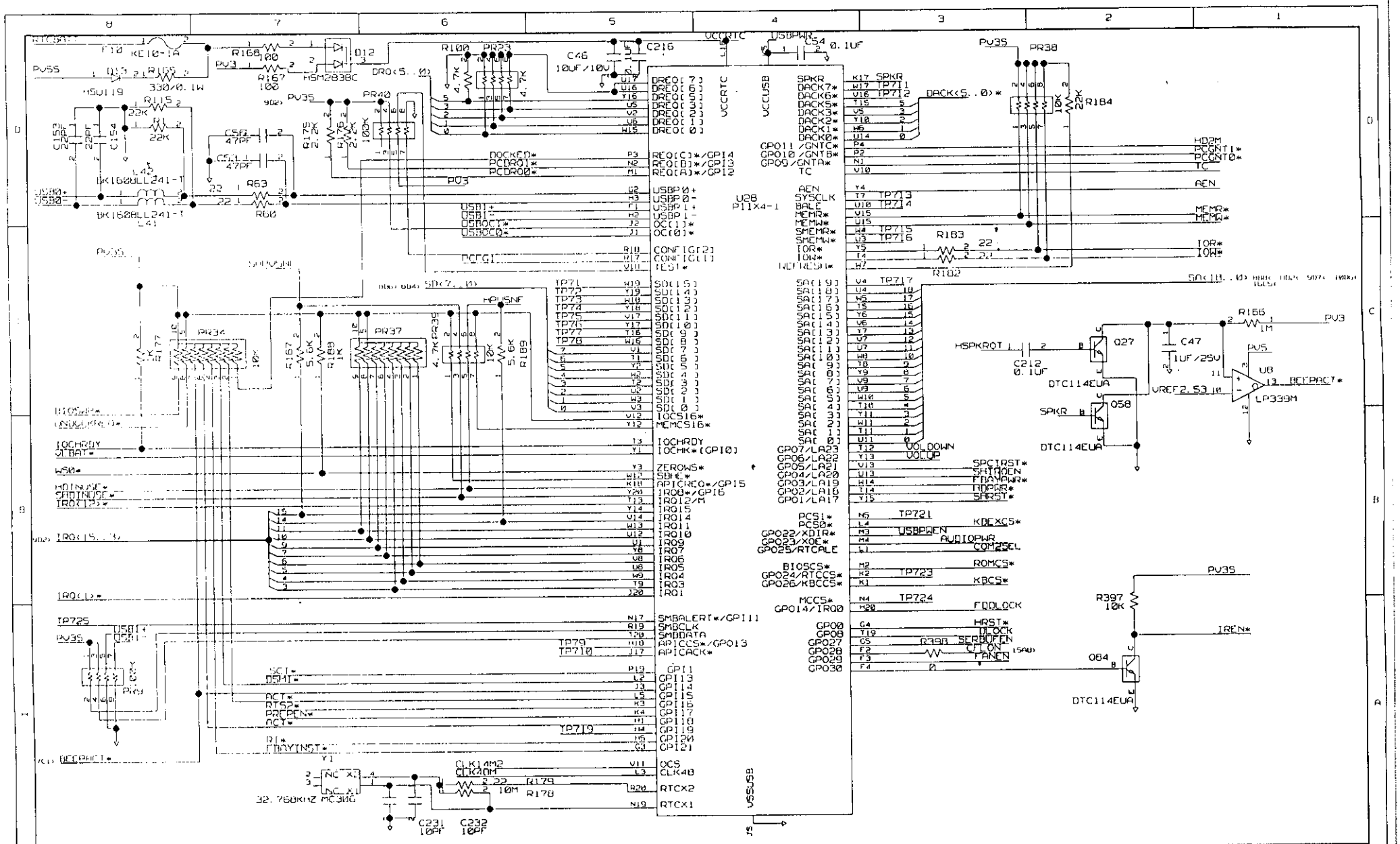
U28
PIIX4-1
VCCRTC
VCCUSB
VSSUSB
SPKR
DACK7*
DACK6*
DACK5*
DACK3*
DACK2*
DACK1*
DACK0*
GP011/GNTC*
GP010/GNTB*
GP09/GNTA*
TC
AEN
SYSCLK
BALE
MEMR*
MEMW*
SMEMR*
SMEMW*
IOR*
IOW*
REFRESH*
SA(19)
SA(18)
SA(17)
SA(16)
SA(15)
SA(14)
SA(13)
SA(12)
SA(11)
SA(10)
SA(9)
SA(8)
SA(7)
SA(6)
SA(5)
SA(4)
SA(3)
SA(2)
SA(1)
SA(0)
GP07/LA23
GP06/LA22
GP05/LA21
GP04/LA20
GP03/LA19
GP02/LA18
GP01/LA17
PCS1*
PCS0*
GP022/XDIR*
GP023/XOE*
GP025/RTCALE
BIOSCS*
GP024/RTCCS*
GP026/KBCCS*
MCCS*
GP014/IRQ0
GP00
GP08
GP027
GP028
GP029
GP030
GPI1
GPI13
GPI14
GPI15
GPI16
GPI17
GPI18
GPI19
GPI20
GPI21
OCS
CLK48
RTCX2
RTCX1
SMBALERT*/GPI11
SMBCLK
SMBDATA
APICCS*/GPO13
APICACK*
DREQ(7)
DREQ(6)
DREQ(5)
DREQ(3)
DREQ(2)
DREQ(1)
DREQ(0)
REQ(C)*/GPI4
REQ(B)*/GPI3
REQ(A)*/GPI2
USBP0+
USBP0-
USBP1+
USBP1-
OC(1)*
OC(0)*
CONFIG(2)
CONFIG(1)
TEST*
SD(15)
SD(14)
SD(13)
SD(12)
SD(11)
SD(10)
SD(9)
SD(8)
SD(7)
SD(6)
SD(5)
SD(4)
SD(3)
SD(2)
SD(1)
SD(0)
IOCS16*
MEMCS16*
IOCHRDY
IOCHK*(GPI0)
ZEROWS*
SBHE*
APICREQ*/GPI5
IRQ8*/GPI6
IRQ12/M
IRQ15
IRQ14
IRQ11
IRQ10
IRQ9
IRQ7
IRQ6
IRQ5
IRQ4
IRQ3
IRQ1
DCD1*
DSR1*
CTS1*
RTS2*
PREPEN*
DCT*
RI*
DRAYINST*
DCD
CLK14M2
CLK40M
32.768KHZ MC306
C231 10PF
C232 10PF
R179 10M
R178 22
R397 10K
Q84
DTC114EUA
Q27
Q58
U8
LP339M
R166 1M
C47 1UF/25V
C212 0.1UF
HSPKRQT
VREF2.53
BEEPACT*
SPCIRST*
SHIRQEN
FDAYPWR*
IDPDR*
SARST*
KDEXCS*
USBPWEN
AUDIOPWR
COM2SEL
ROMCS*
KBCS*
FDDLOCK
HRST*
CLOCK
SERBOFEN
CFLON
FANEN
IREN*
HD2M
PCGNT1*
PCGNT0*
MEMR*
MEMW*
IOR*
IOW*
R184 10K 2K
R183 22
R182
R168 100
R167 100
HSM2838C
D12
R100 4.7K
PR23
C46 10UF/10V
C216
C54 0.1UF
USBPWR
PV35
PR38
PR40
PR34
PR37
PR39
PR41
R177 10K
R167 5.6K
R188 1K
R189 5.6K
4.7K
10K
R115 22K
R175 2.2K
R63 22
R60 22
L45 BK1608LL241-T
L41 BK1608LL241-T
C59 47PF
C61 47PF
C154 22PF
C155 22PF
F10 KE10-1A
R105 330/0.1W
MSU119
PV5
PV3
PV3
PV5
PV3
PV5
PV3
PV5

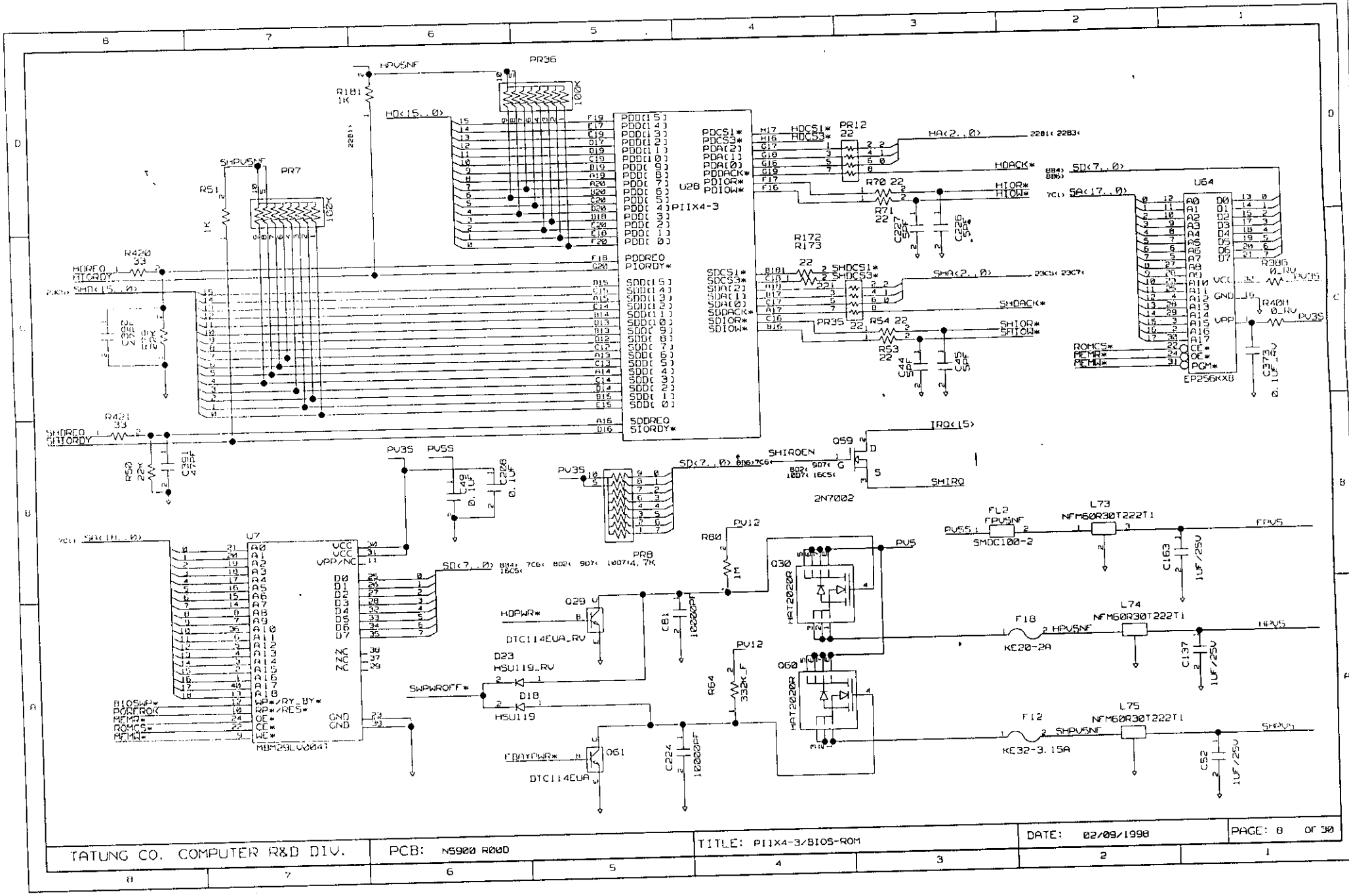
U28
PIIX4-3
PDD[15]
PDD[14]
PDD[13]
PDD[12]
PDD[11]
PDD[10]
PDD[9]
PDD[8]
PDD[7]
PDD[6]
PDD[5]
PDD[4]
PDD[3]
PDD[2]
PDD[1]
PDD[0]
PDDREQ
PIORDY*
SDD[15]
SDD[14]
SDD[13]
SDD[12]
SDD[11]
SDD[10]
SDD[9]
SDD[8]
SDD[7]
SDD[6]
SDD[5]
SDD[4]
SDD[3]
SDD[2]
SDD[1]
SDD[0]
SDDREQ
SIORDY*
PDCS1*
PDCS3*
PDA[2]
PDA[1]
PDA[0]
PDDACK*
PDIOR*
PDIOW*
SDCS1*
SDCS3*
SDA[2]
SDA[1]
SDA[0]
SDDACK*
SDIOR*
SDIOW*
PR36
PR7
PR12
PR35
PR8
R181 1K
R51 1K
R420 33
R421 33
R50 22K
R172
R173
R70 22
R71 22
R54 22
R53 22
R386 0_RV
R401 0_RV
C227 56PF
C226 56PF
C44 56PF
C45 56PF
C392 47PF
C391 47PF
C49 0.1UF
C228 0.1UF
C373 0.1UF_RV
U64
EP256KXB
U7
MBM29LV004T
Q59
2N7002
Q30
Q60
HAT2020R
Q29
DTC114EUA_RV
Q61
DTC114EUA
D23
HSU119_RV
D18
HSU119
FL2
SMDC100-2
L73
NFM60R30T222T1
L74
NFM60R30T222T1
L75
NFM60R30T222T1
F18
KE20-2A
F12
KE32-3.15A
C163 1UF/25V
C137 1UF/25V
C52 1UF/25V
C81 10000PF
C224 10000PF
R80 1M
R64 332K_F
R386 0_RV
R401 0_RV
HDREQ
HIORDY
SHDREQ
SIORDY
HDPWR*
SWPWROFF*
FBATPWR*
BIOSWP*
PORERROR*
MEMWR*
ROMCS*
MEMRD*
SHIROEN
SHIRQ
IRQ(15)
HPV5NF
SHPV5NF
FPV5NF
PV3S
PV5S
PV12
PV5
HDACK*
HIOR*
HIOW*
SHDACK*
SHIOR*
SHIOW*
HD(15..0)
SD(7..0)
SA(17..0)
HA(2..0)
SMA(2..0)
SMD(15..0)
TATUNG CO. COMPUTER R&D DIV.
PCB: N5900 R00D
TITLE: PIIX4-3/BIOS-ROM
DATE: 02/09/1998
PAGE: 8 OF 30

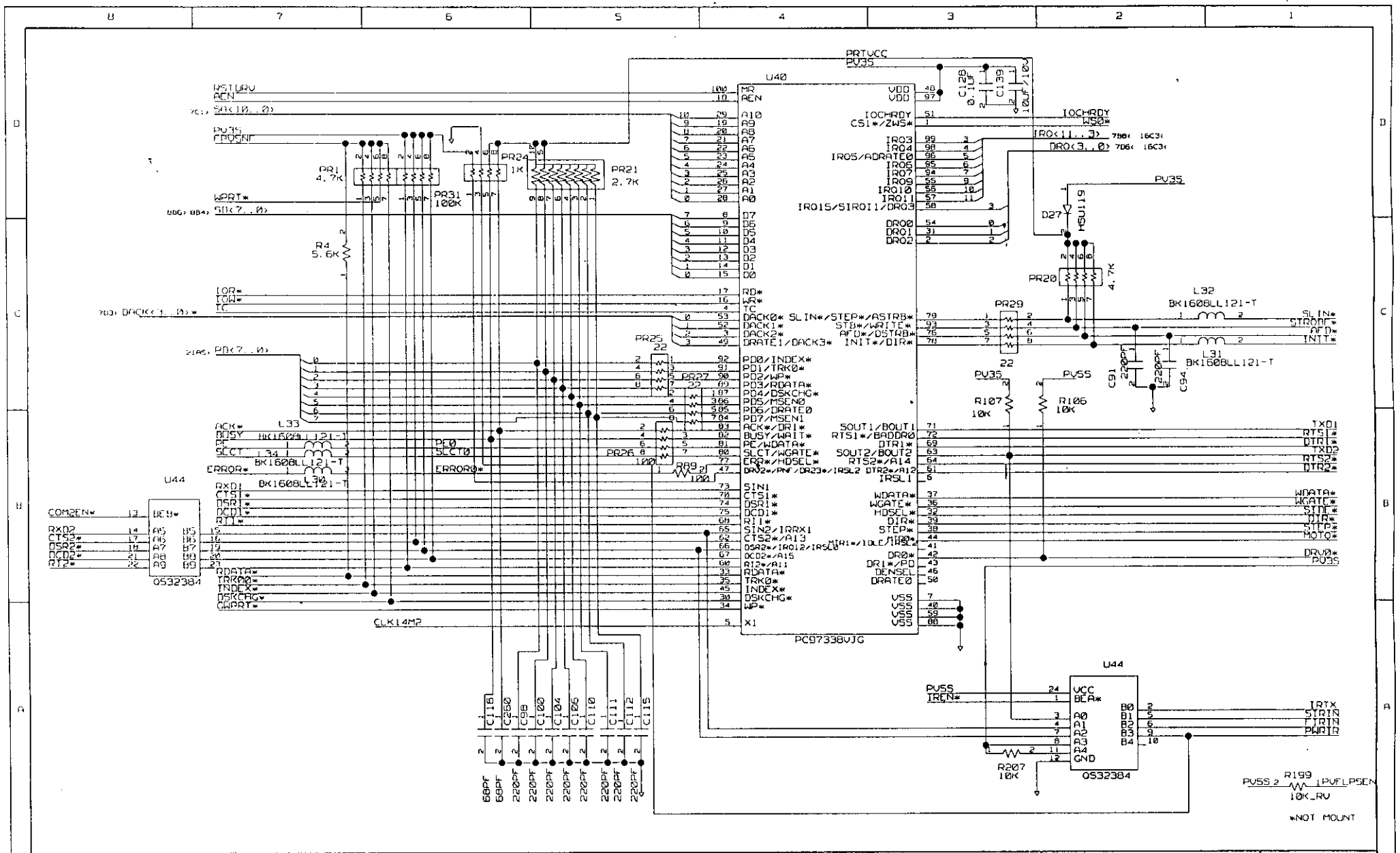

TATUNG CO. COMPUTER R&D DIV.	PCB: N5900 R00D	TITLE: SUPER I/O	DATE: 02/09/1998	PAGE: 9 OF 30

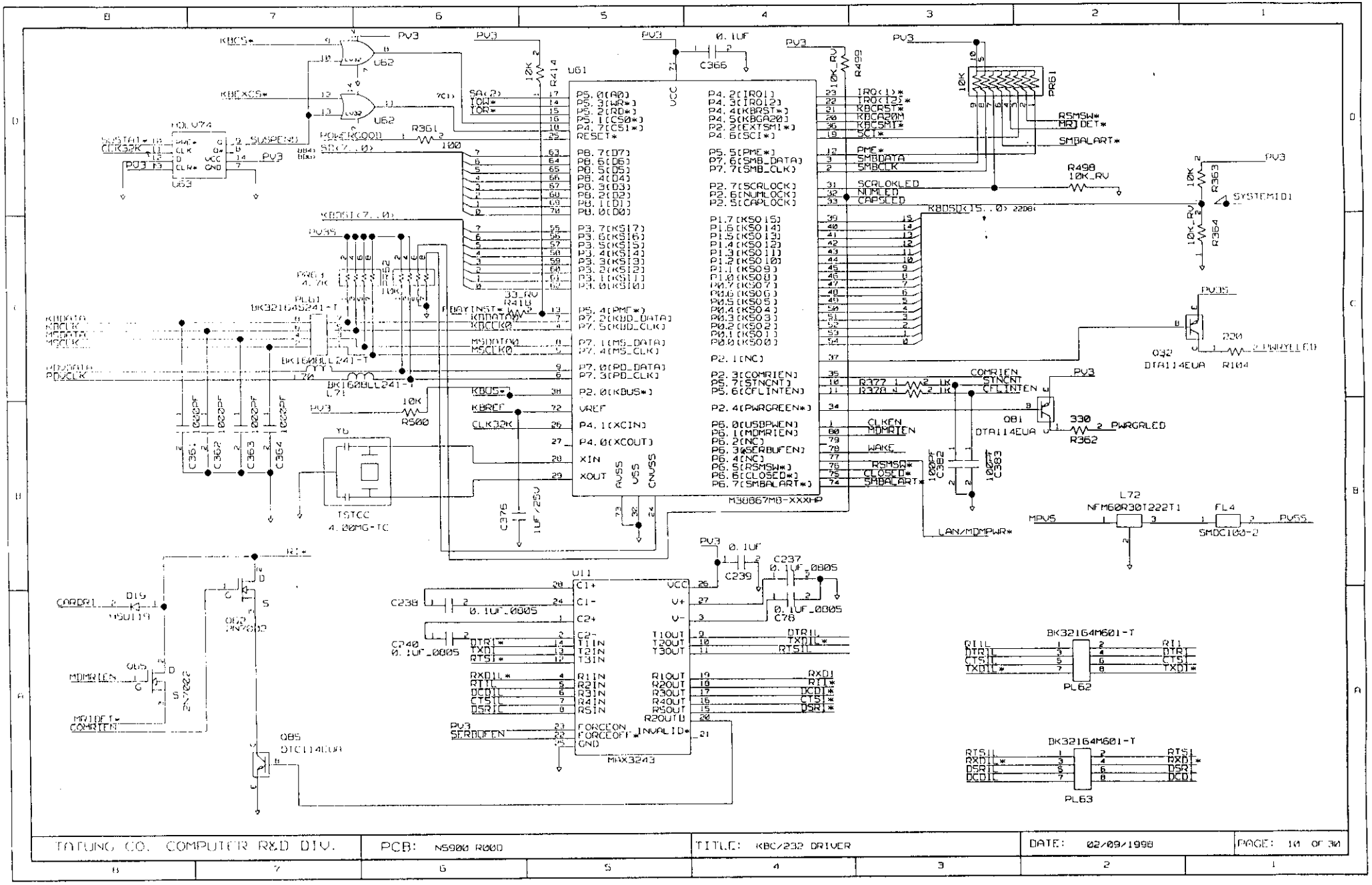

TATUNG CO. COMPUTER R&D DIV.	PCB: N5900 R000	TITLE: KBC/232 DRIVER	DATE: 02/09/1998	PAGE: 10 OF 30

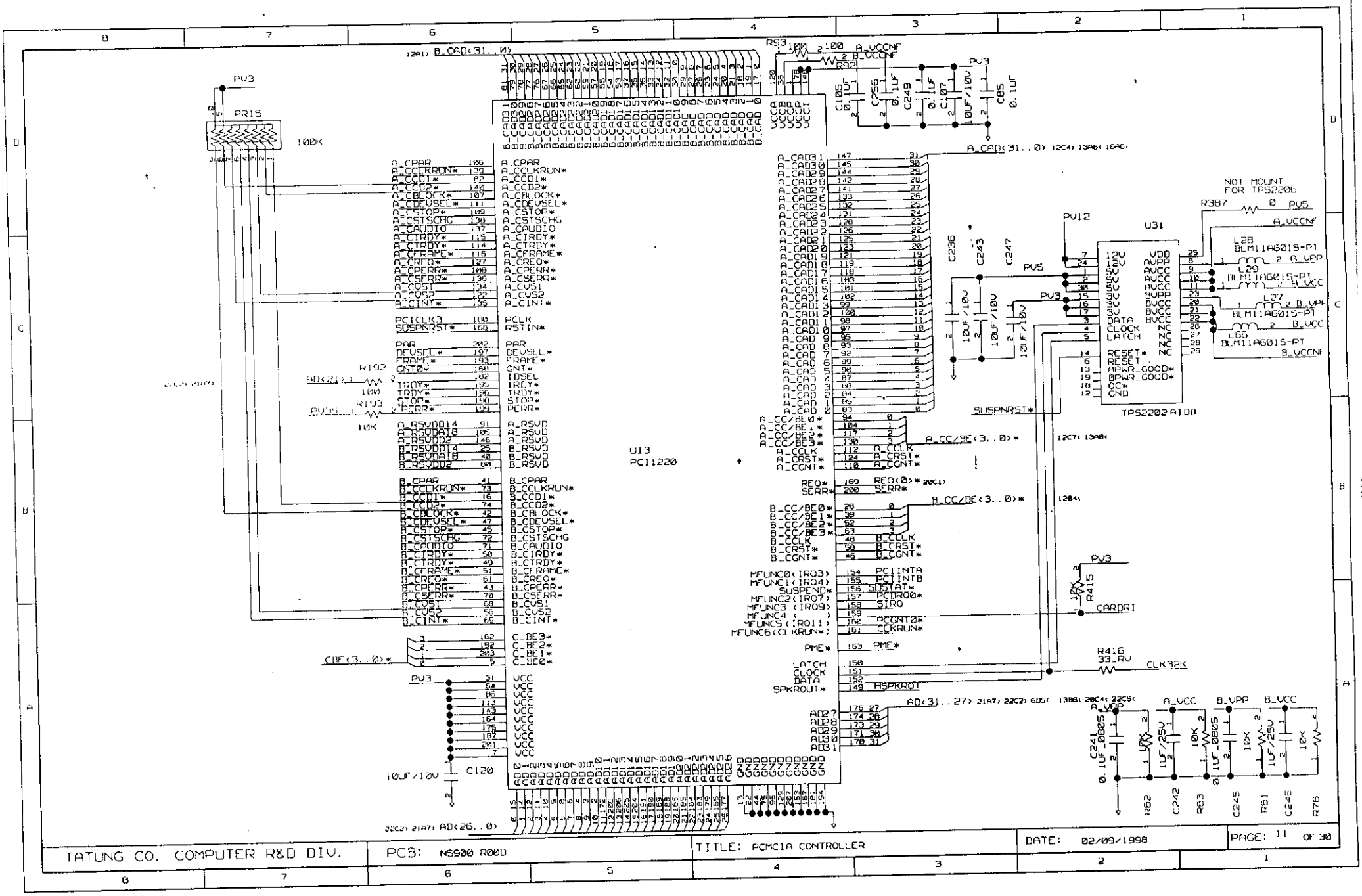
U13
PCI1220
U31
TPS2202AIDB
PR15
100K
R192
100
R193
10K
R93
R92
C120
10UF/10V
NOT MOUNT
FOR TPS2206
R387
L28
BLM11A601S-PT
L29
BLM11A601S-PT
L27
BLM11A601S-PT
L66
BLM11A601S-PT
R415
CARDRI
R416
33_RV
CLK32K
A_VCC
B_VPP
B_VCC
A_VPP
A_VCCNF
B_VCCNF
SUSPNRST*
A_CC/BE(3..0)*
B_CC/BE(3..0)*
B_CAD(31..0)
A_CAD(31..0)
AD(26..0)
AD(31..27)
CBE(3..0)*
PV3
PV5
PV12
DATE: 02/09/1998
PAGE: 11 OF 30
TITLE: PCMCIA CONTROLLER
PCB: N5900 R00D
TATUNG CO. COMPUTER R&D DIV.

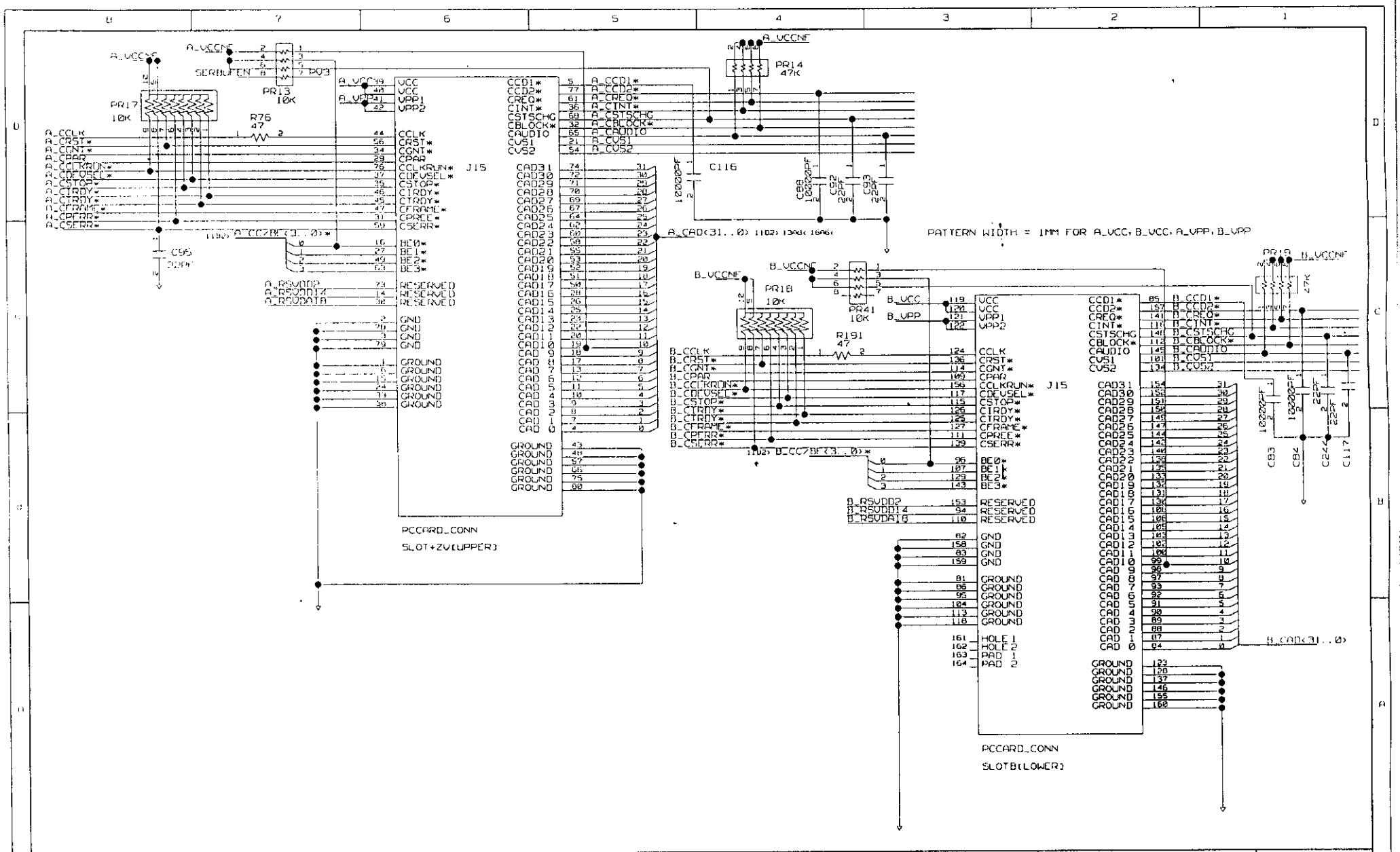

TATUNG CO. COMPUTER R&D DIV.	PCB: N5900 R00D		TITLE: PCMCIA SLOTS		DATE: 02/09/1998		PAGE: 12 OF 30

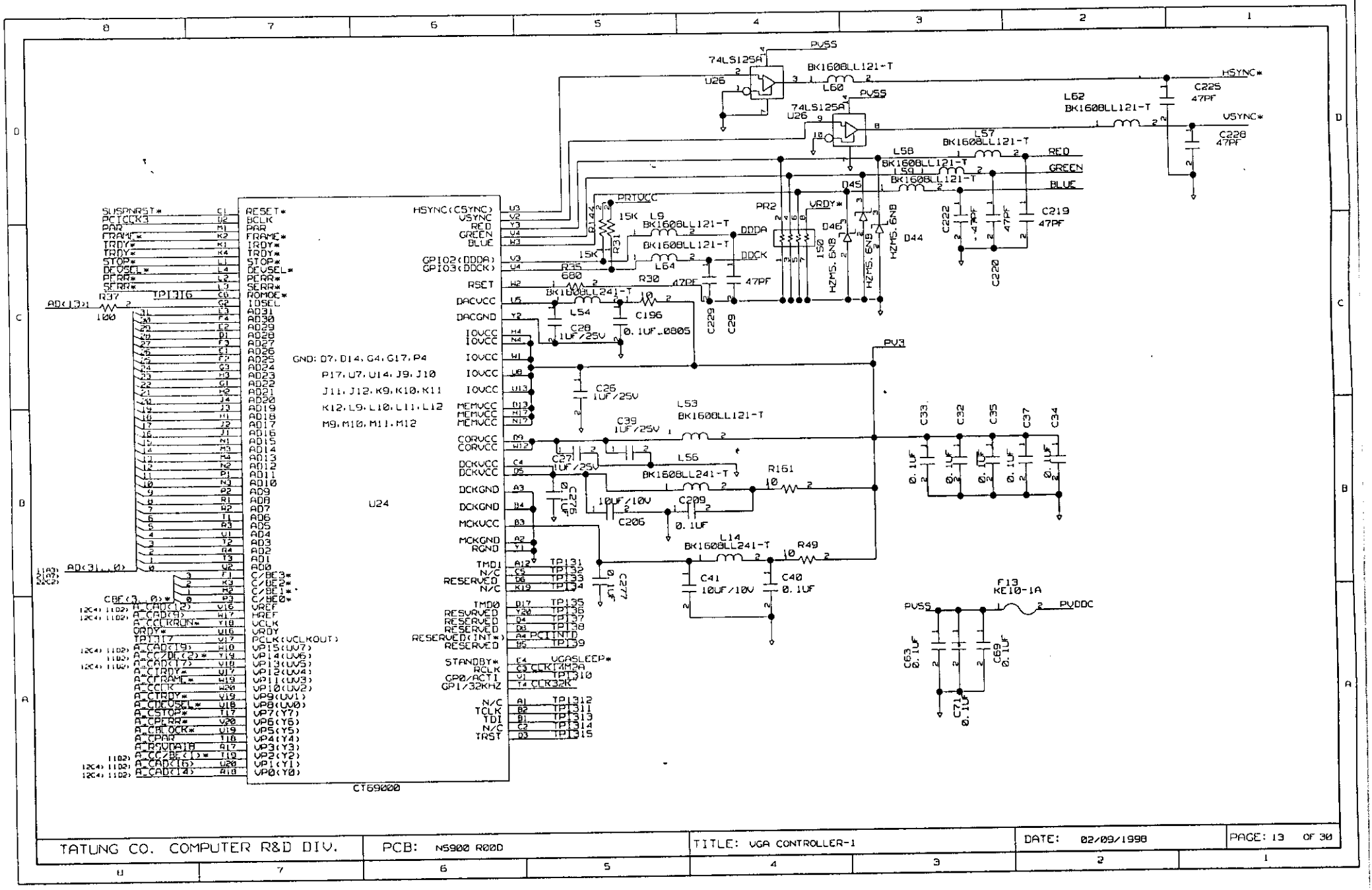

TATUNG CO. COMPUTER R&D DIV.	PCB: N5900 R00D	TITLE: VGA CONTROLLER-1	DATE: 02/09/1998	PAGE: 13 OF 30

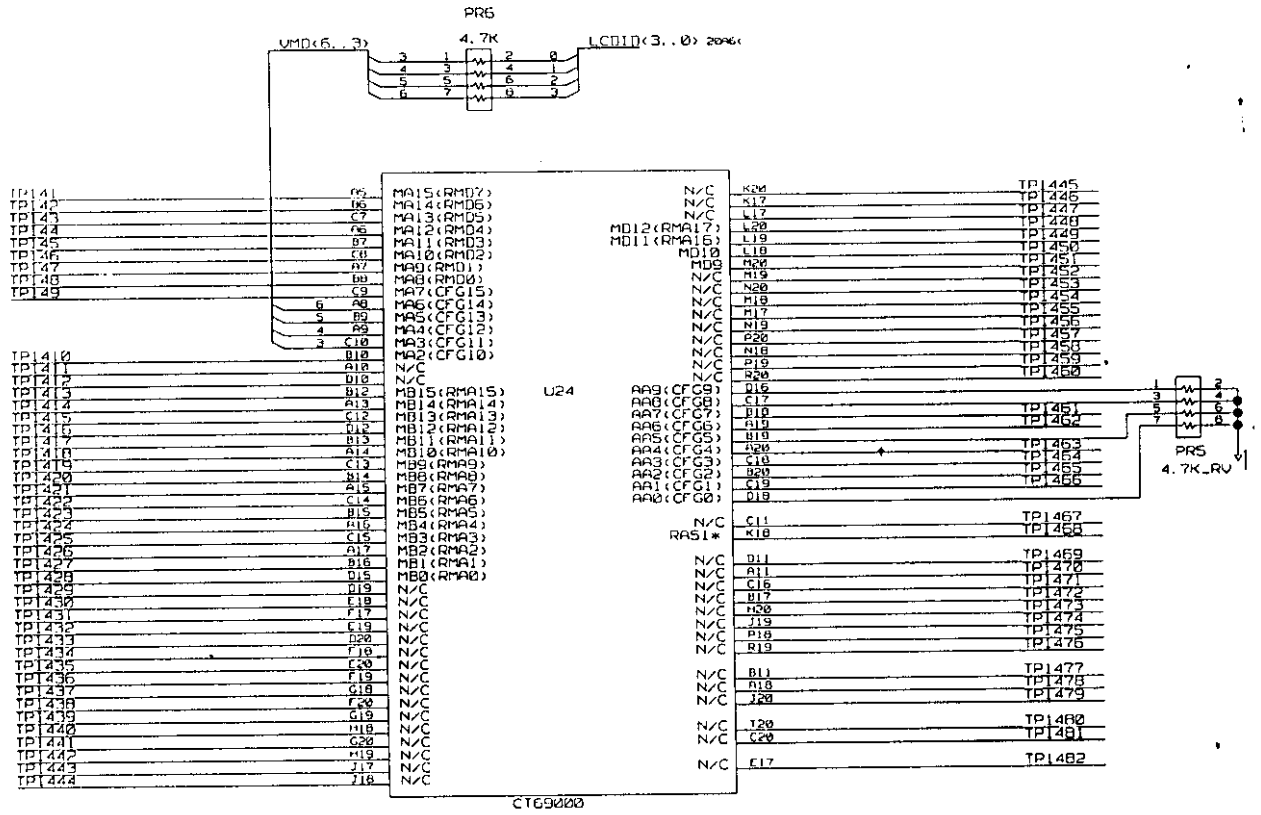

BOOT CONFIGGRATION		
	LOW	HIGH
AA0	PCI	VL
AA2	2*CLK	1*CLK
AA5	EXTCLK	-
AA6	AA26, 27	ENABKL/ACTI
AA7	TEST	NOT TEST
AA8	CORVCC3. 3V	CORVCC5. 0V

TATUNG CO. COMPUTER R&D DIV.	PCB: N5900 R00D	TITLE: VGA CONTROLLER-2	DATE: 02/09/1998	PAGE: 14 OF 30

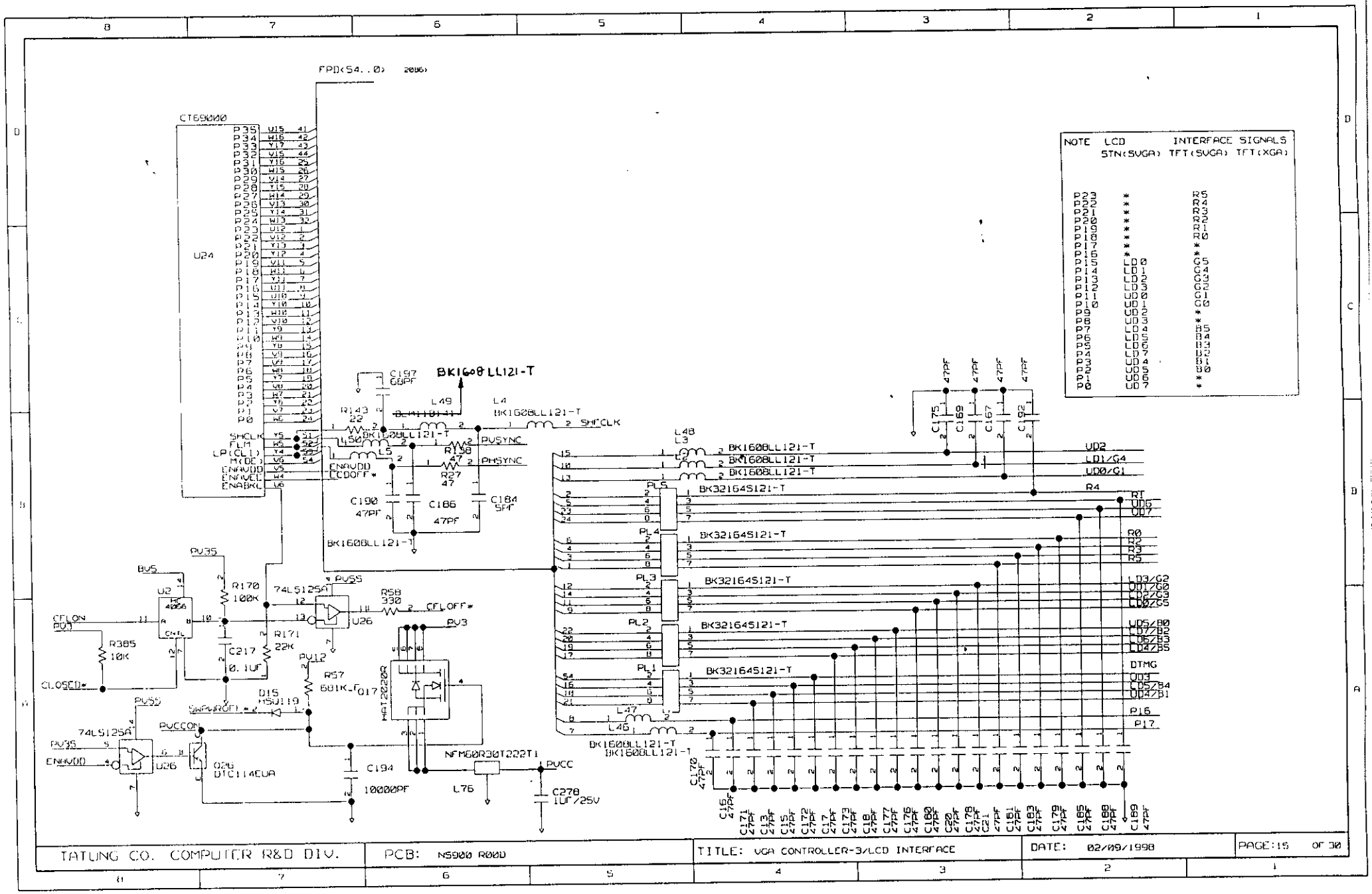

NOTE LCD INTERFACE SIGNALS

	STN(SVGA)	TFT(SVGA)	TFT(XGA)
P23	*		R5
P22	*		R4
P21	*		R3
P20	*		R2
P19	*		R1
P18	*		R0
P17	*		*
P16	*		*
P15	LD0		G5
P14	LD1		G4
P13	LD2		G3
P12	LD3		G2
P11	UD0		G1
P10	UD1		G0
P9	UD2		*
P8	UD3		*
P7	LD4		B5
P6	LD5		B4
P5	LD6		B3
P4	LD7		B2
P3	UD4		B1
P2	UD5		B0
P1	UD6		*
P0	UD7		*

TATUNG CO. COMPUTER R&D DIV.	PCB: N5900 R00D	TITLE: VGA CONTROLLER-3/LCD INTERFACE	DATE: 02/09/1998	PAGE:15 OF 30

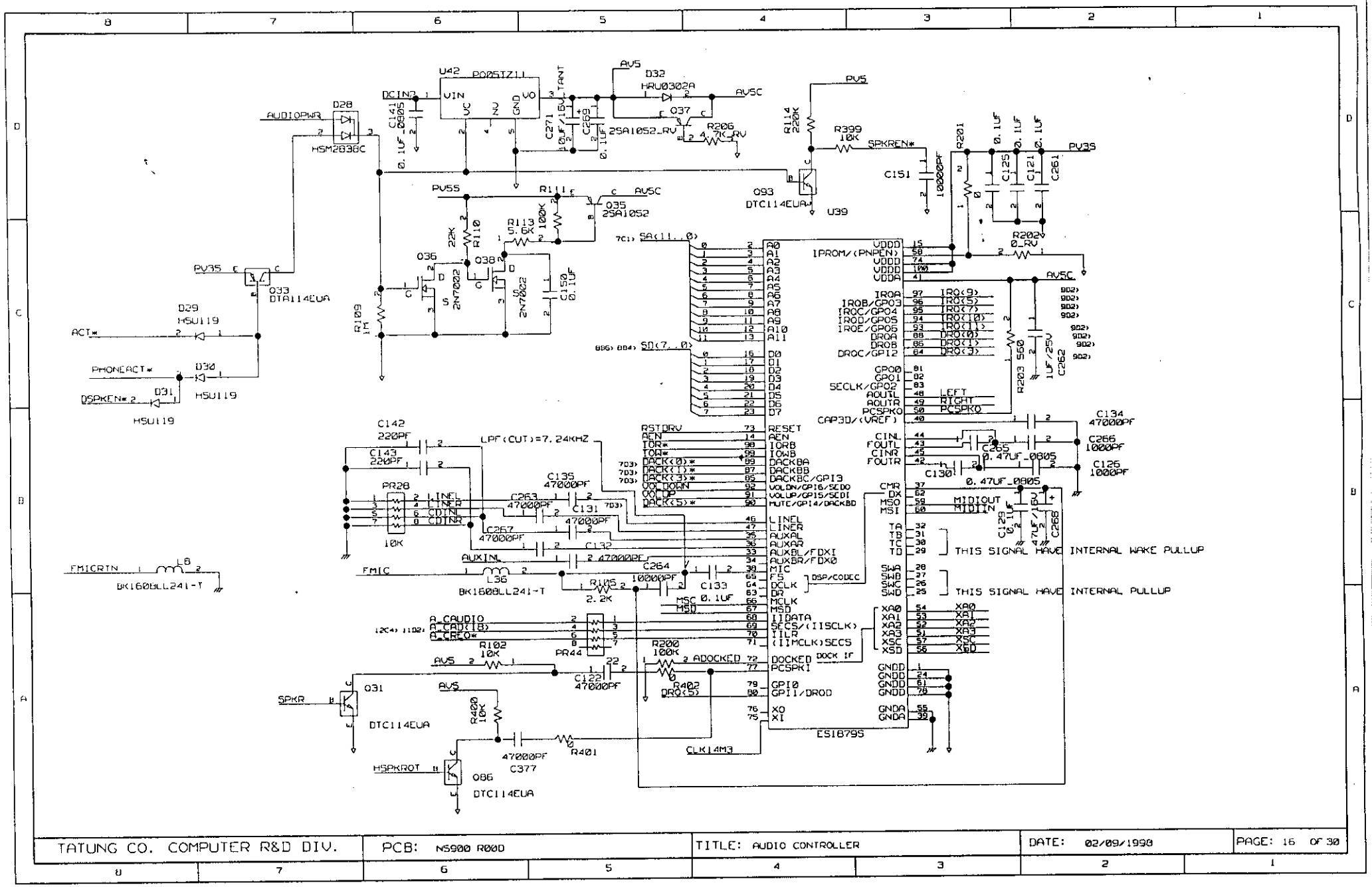

TATUNG CO. COMPUTER R&D DIV.	PCB: N5900 R00D	TITLE: AUDIO CONTROLLER	DATE: 02/09/1998	PAGE: 16 OF 30

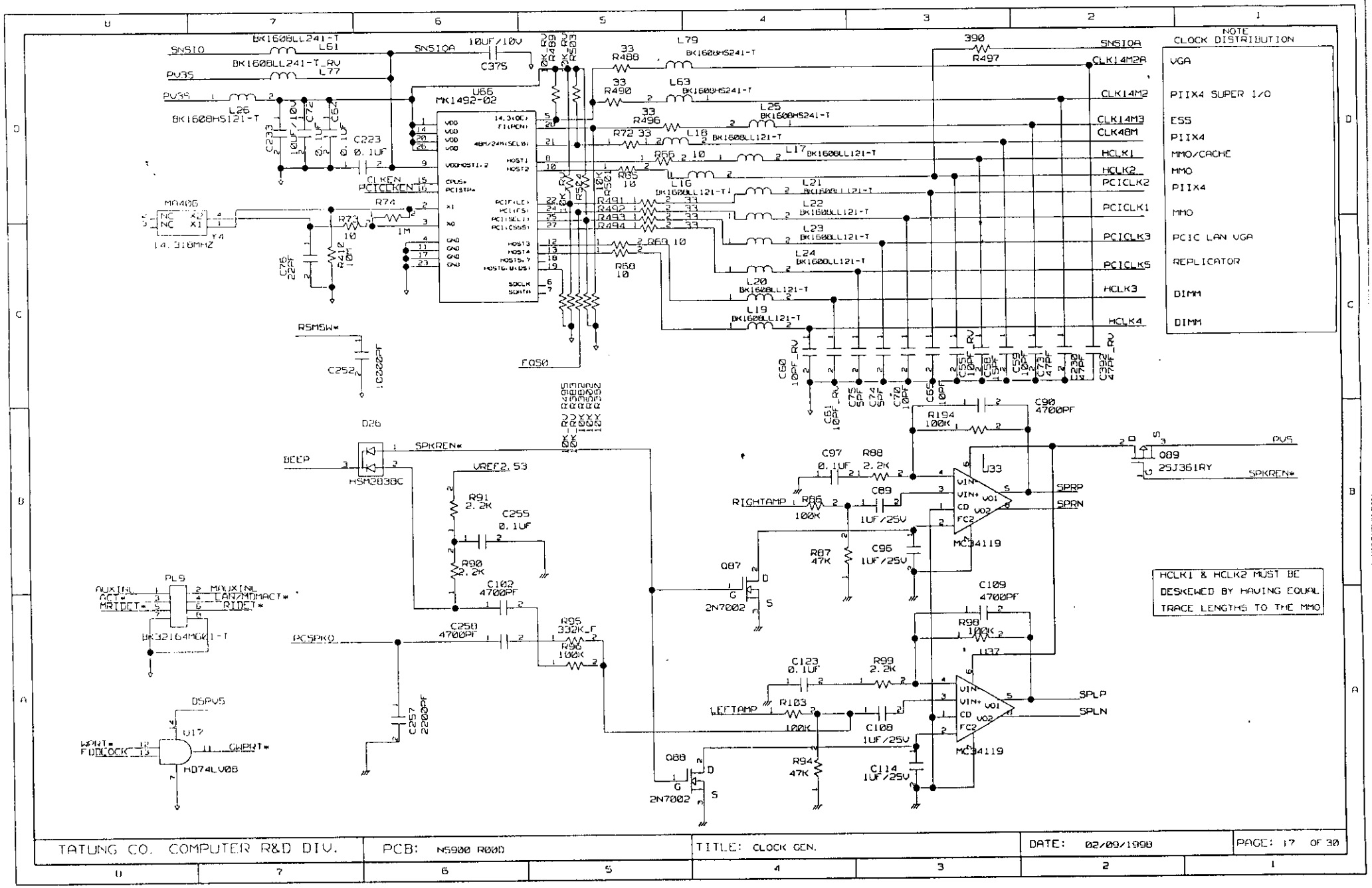
NOTE
CLOCK DISTRIBUTION
VGA
PIIX4 SUPER I/O
ESS
PIIX4
MMO/CACHE
MMO
PIIX4
MMO
PCIC LAN VGA
REPLICATOR
DIMM
DIMM
SNSIOA
CLK14M2A
CLK14M2
CLK14M3
CLK48M
HCLK1
HCLK2
PCICLK2
PCICLK1
PCICLK3
PCICLK5
HCLK3
HCLK4
U66
MK1492-02
HCLK1 & HCLK2 MUST BE DESKEWED BY HAVING EQUAL TRACE LENGTHS TO THE MMO
U33
MC34119
U37
MC34119
Q87
2N7002
Q88
2N7002
Q89
2SJ361RY
PV5
SPRP
SPRN
SPLP
SPLN
SPKREN*
RIGHTAMP
LEFTAMP
BEEP
D26
HSM2838C
PL9
BK3216H1001-T
U17
HD74LV08
DSPV5
PCSPK0
VREF2.53
FQ50
RSMSW*
CLKEN
PCICLKEN
Y4
14.318MHZ
TATUNG CO. COMPUTER R&D DIV.
PCB: N5900 R00D
TITLE: CLOCK GEN.
DATE: 02/09/1998
PAGE: 17 OF 30

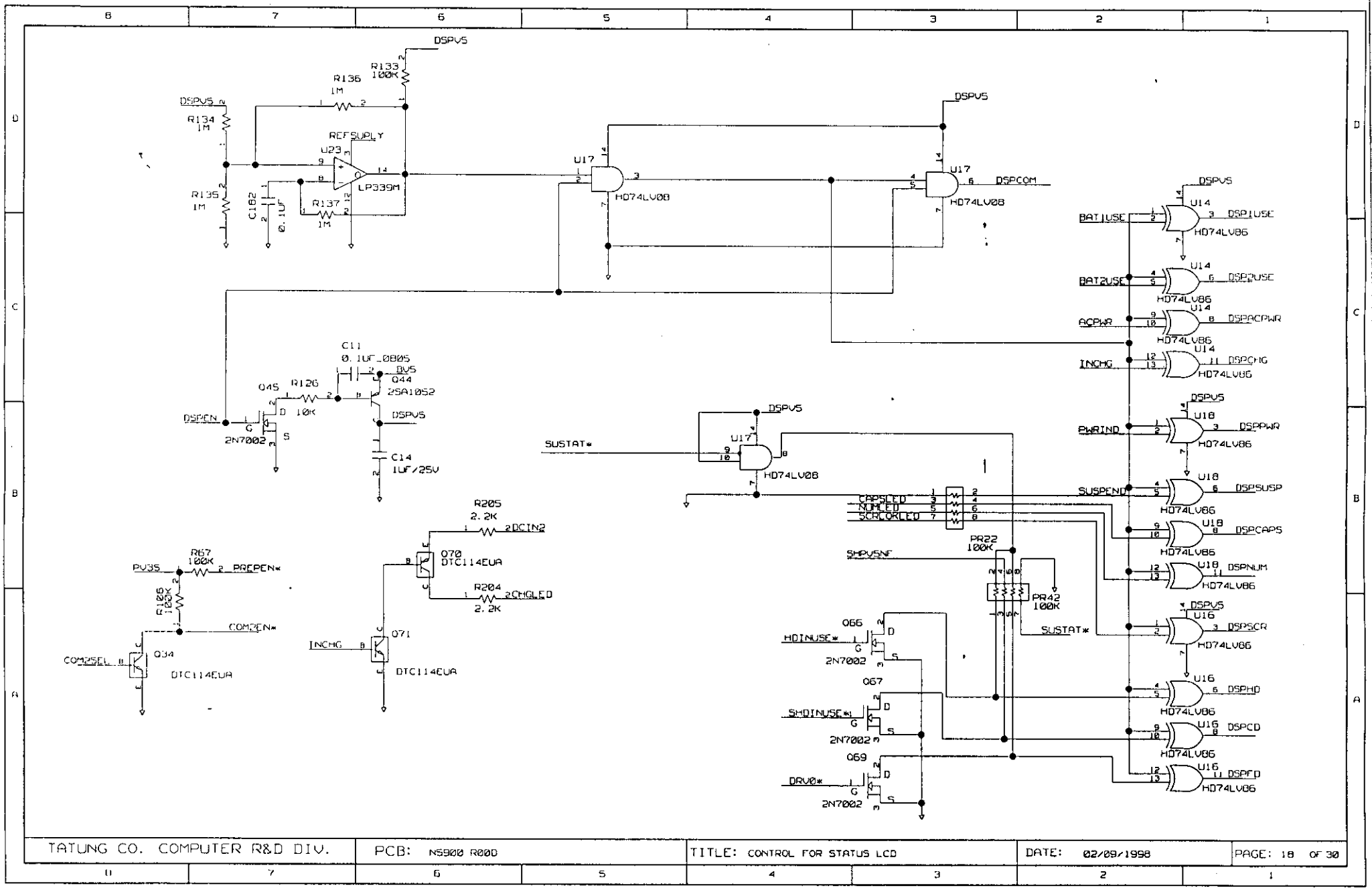

TATUNG CO. COMPUTER R&D DIV.	PCB: N5900 R00D	TITLE: CONTROL FOR STATUS LCD	DATE: 02/09/1998	PAGE: 18 OF 30

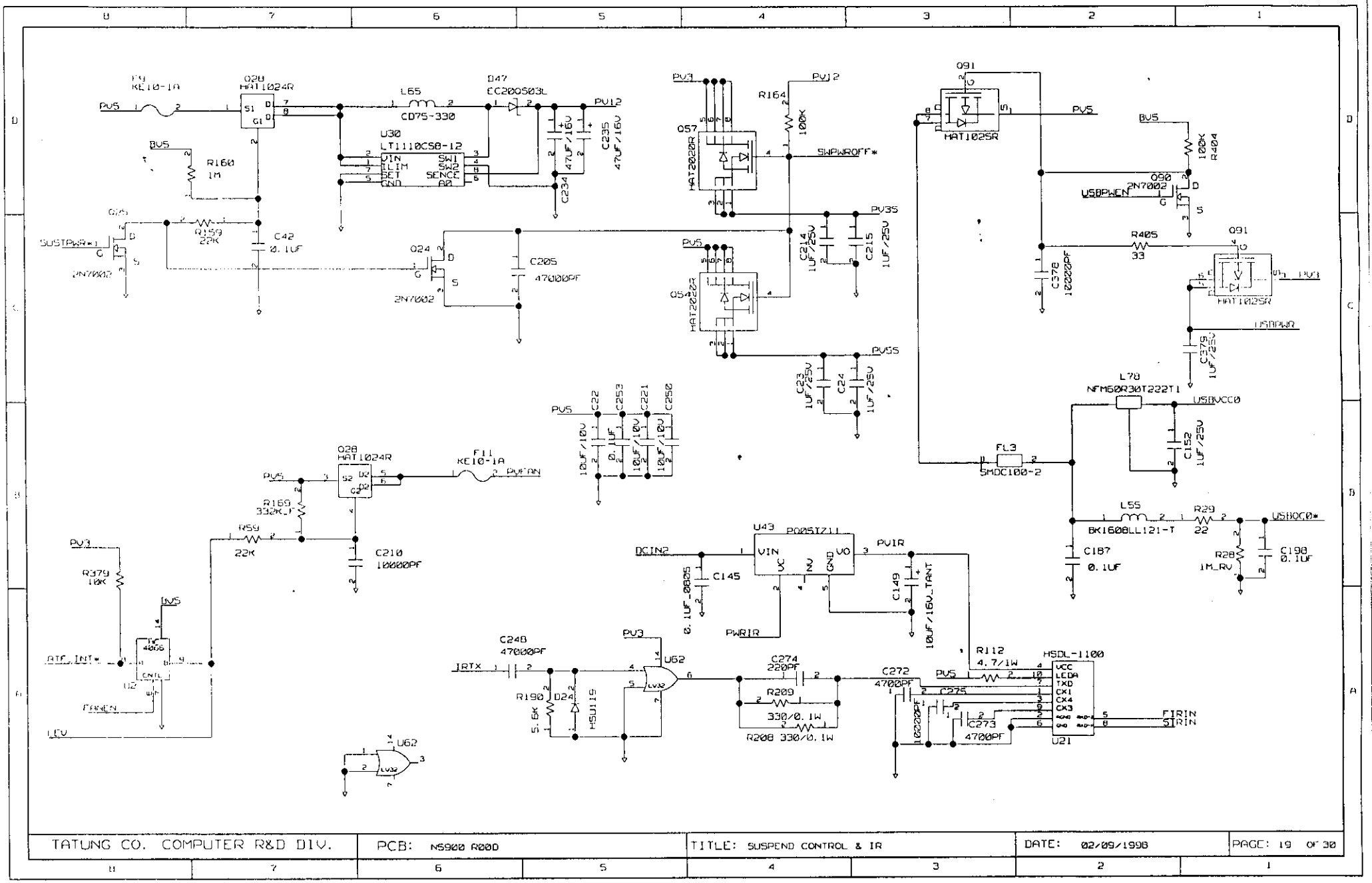

TATUNG CO. COMPUTER R&D DIV.	PCB: N5900 R00D	TITLE: SUSPEND CONTROL & IR	DATE: 02/09/1998	PAGE: 19 OF 30

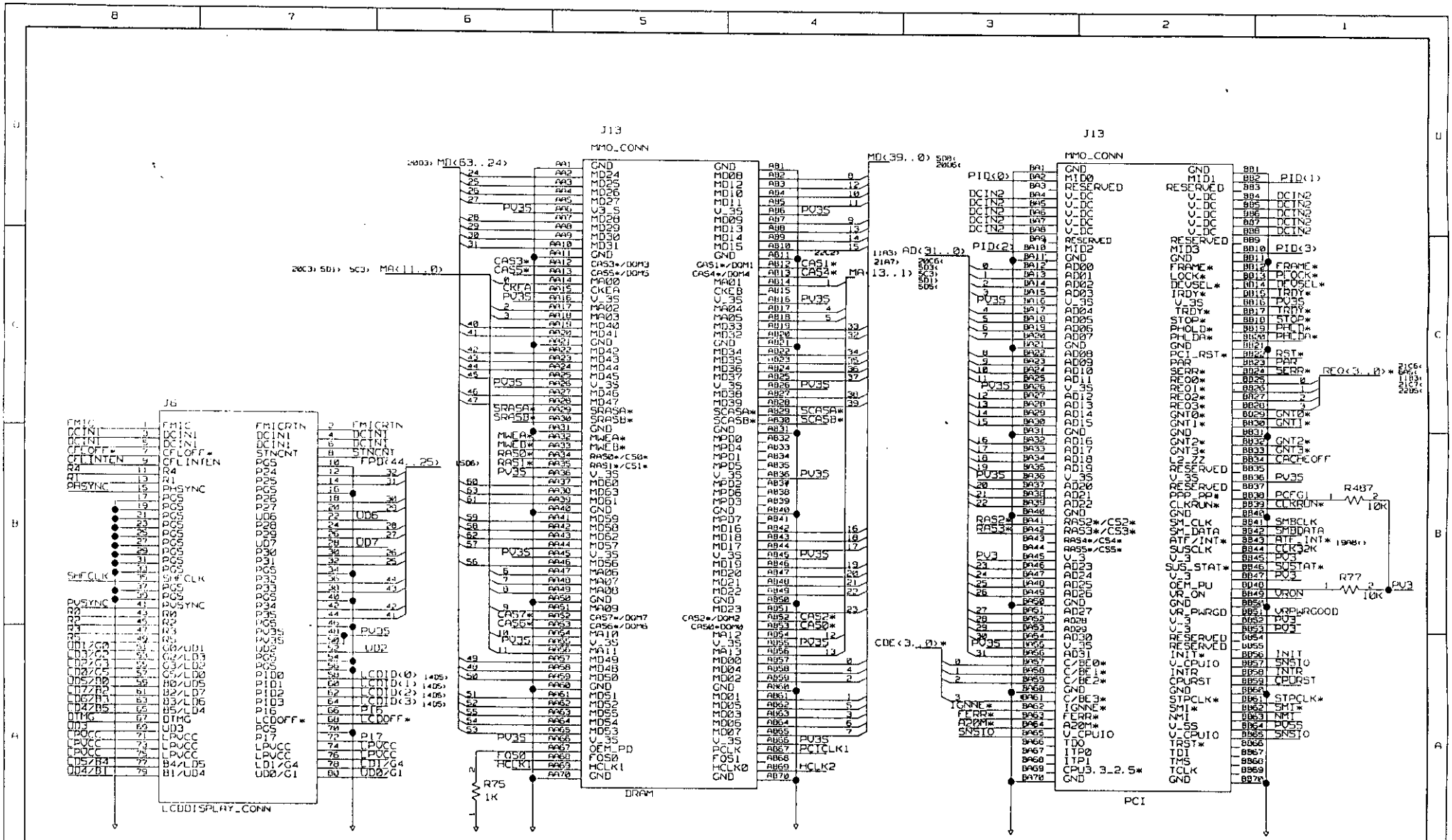

TATUNG CO. COMPUTER R&D DIV.	PCB: N5900 R00D	TITLE: MMO/LCD CONNECTOR	DATE: 02/09/1998	PAGE: 20 OF 30

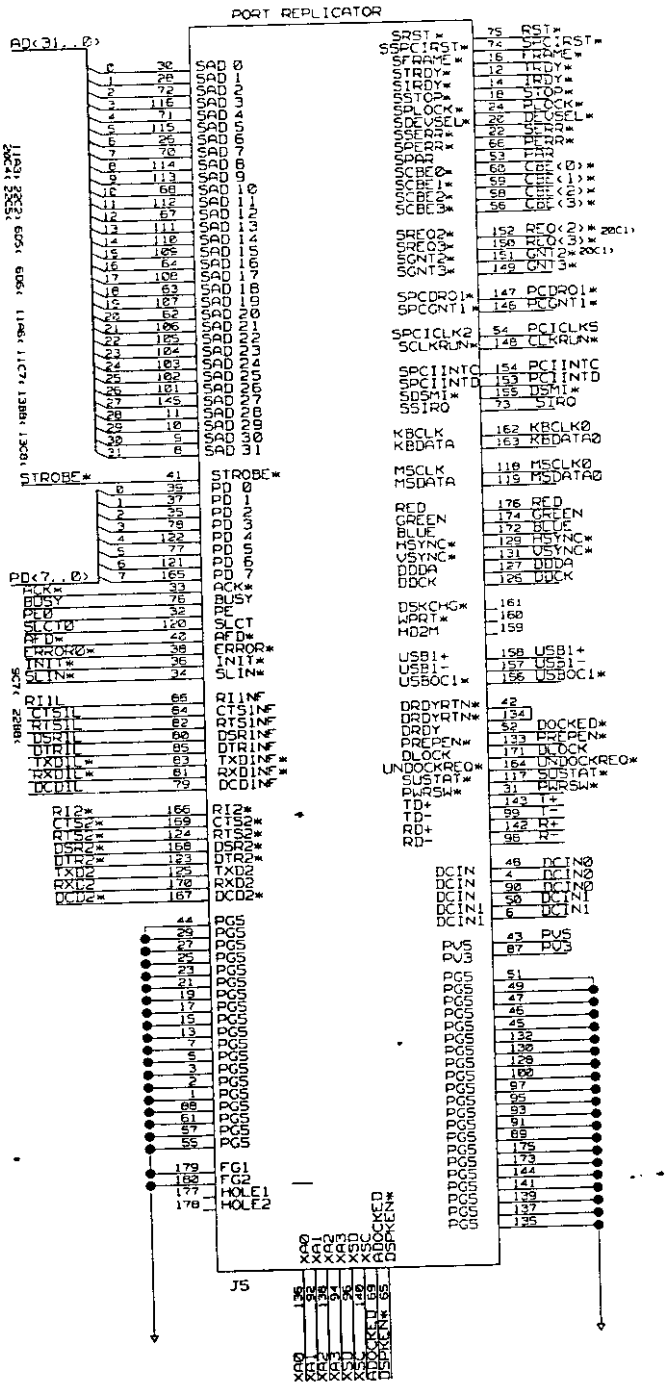

TATUNG CO. COMPUTER R&D DIV.

PCB: N5900 R00D

TITLE: CONNECTOR/PORT REPLICATOR

DATE: 02/09/1998

PAGE: 21 OF 30

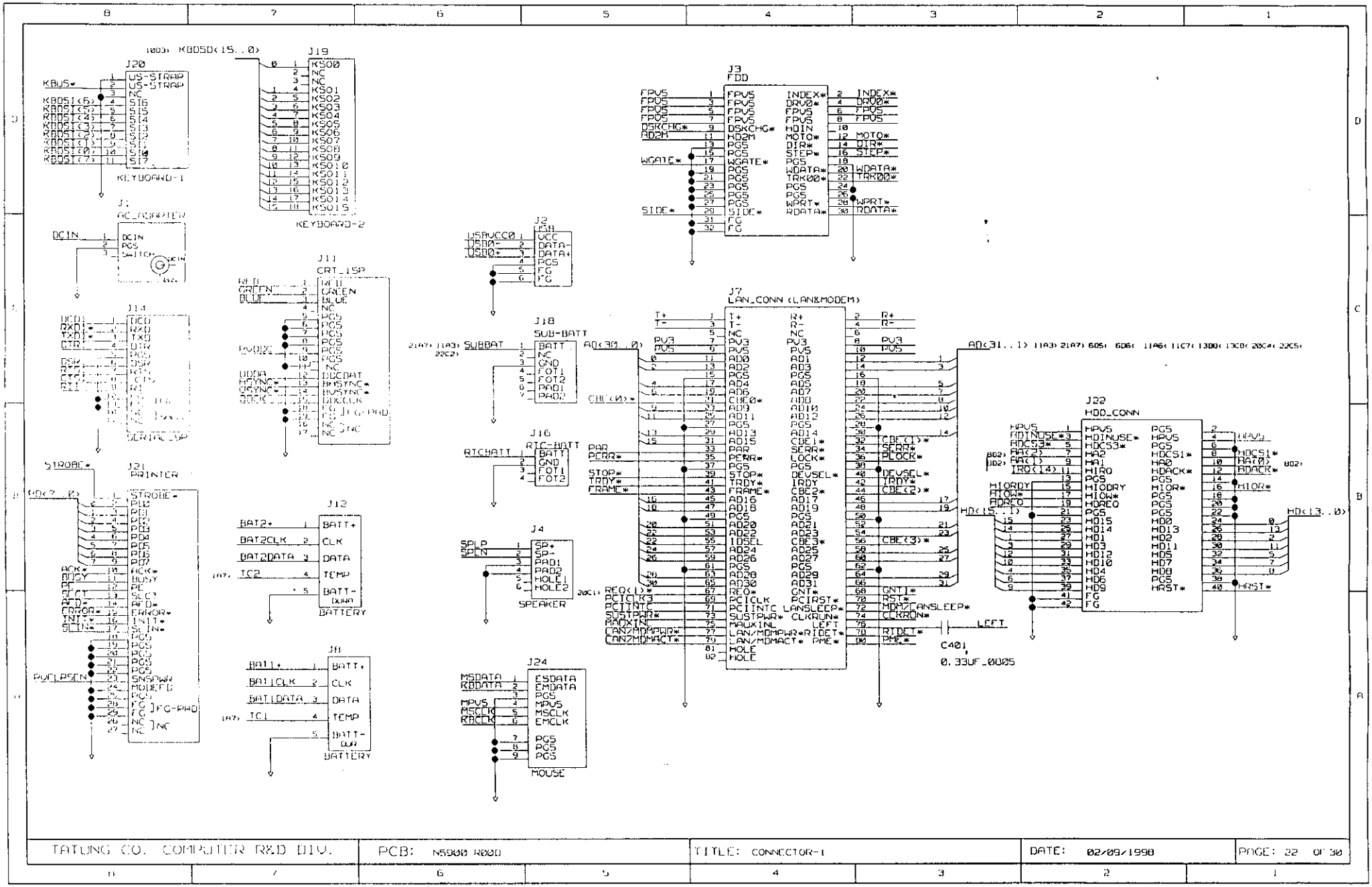

TATUNG CO. COMPUTER R&D DIV.	PCB: N5900 R000	TITLE: CONNECTOR-1	DATE: 02/09/1998	PAGE: 22 OF 30

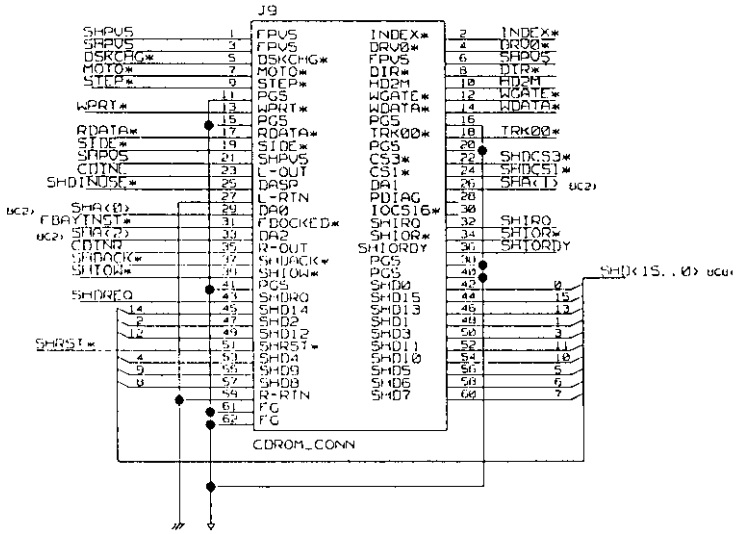

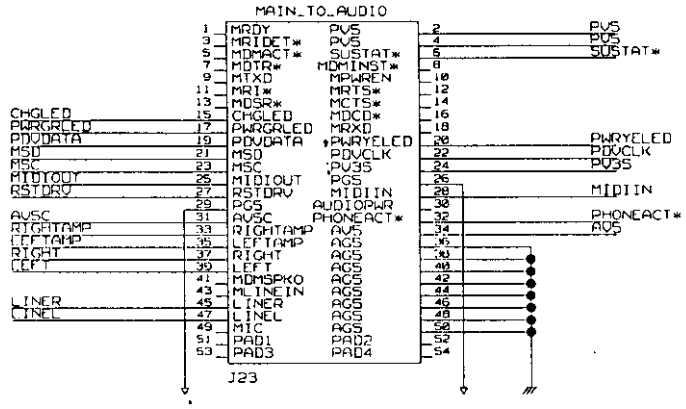

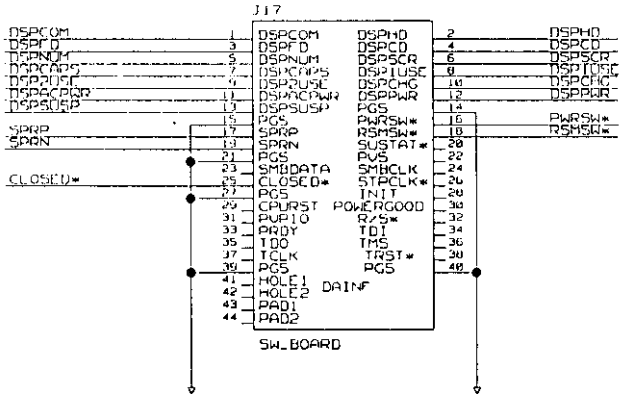

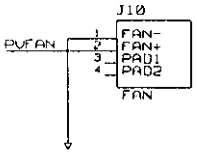

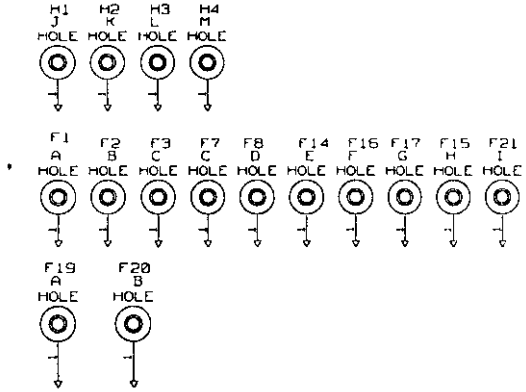

TATUNG CO. COMPUTER R&D DIV.	PCB: N5900 R00D	TITLE: CONNECTOR-2	DATE: 02/09/1998	PAGE: 23 OF 30

```
*** Signal Cross Reference ***
--- for the entire design --

A20M *          6C2< 20A3<
ACK *           9B7< 21A6< 22B8<
ACPWR           1G2< 2G6< 1B2<
ACT *           7A7< 1GC< 17A8<
AD (31..0)      11A3> 21A7> 22C2> 6D5< 6D6< 11A6<
                11C7< 13B0< 13C8< 20C4< 22C5<
ADDOCKED        16A6< 21B2<
ADN             7D1< 9D7< 16B5<
AVD *           9C1< 21A5< 22A8<
ATF_INT *       19A8> 6A5< 20B1<
AUDIOPWR        7B3< 16D7<
AUXIN           16B6< 17B8<
AVS             16A4< 16D5< 20C2<
AVSC            16C2< 16D4< 16D5< 21C4<
B_CAD (31..0)   11G3> 12C4< 13A8< 1GA6<
B_CFAUDIO       11C6< 12D3< 1GA6<
B_CBLOCK *      11B6< 12D3< 13A6<
B_CC2M (3..0) * 11B6< 12C7< 13A8<
B_CCD1 *        11B6< 12D7<
B_CCD2 *        11B6< 12D3<
B_CCLK          11B3< 12D4< 13A8<
B_CCLKRUN *     11B6< 12D4< 13A8<
B_CDEVSEL *     11B6< 12D8< 13A8<
B_CFRAME *      11B6< 12D8< 13A8<
B_CGNT *        11B3< 12C5<
B_CINT *        11A6< 12C1<
B_CIRDY *       11B6< 12B5<
B_CPAR          11B6< 12C5<
B_CPERR *       11B6< 12B5<
B_CREQ *        11B6< 12C1<
B_CRST *        11B3< 12C5<
B_CSERR *       11B6< 12C5<
B_CSTOP *       11B6< 12C5<
B_CSTSCHG       11B6< 12C2<
B_CTRDY *       11B6< 12B5<
B_CVS1          11A6< 12C1<
B_CVS2          11A6< 12C1<
B_RSVDA18       11B6< 12B4<
B_RSVDD2        11B6< 12B4<
B_RSVDD14       11B6< 12B4<
B_VCC           11A1< 11C1< 12C3<
B_VCCM          11C1< 11D3< 12C1< 12C4<
B_VAP           11A1< 11C1< 12C3<
CACHEOFF        6B2< 20B1<
CHASLED         10D3< 10B4<
CHKDRI          10A8< 11A2<
CIS4 *          5D3< 5D5< 20B4<
CIS1 *          5D3< 5D5< 20C4<
CAS2 *          5D3< 5B5< 20B4<
CAS3 *          5D3< 5B5< 20C6<
CAS4 *          5D1< 5D3< 20C4<
CAS5 *          5D1< 5D3< 20C6<
CAS6 *          5D1< 5B3< 20B6<
CAS7 *          5D1< 5B3< 20B6<
CBC (3..0) *    6D5< 11A7< 13A8< 20A4< 21C7< 22B3<
                22D5<
CDINL           16B6< 23C7<
CDINR           16D6< 23C7<
CFLINTEN        10C2< 20B8<
CFLOFF *        15A6< 20B8<
CFLON           15A8> 7A3<
CHGIEN          1A7< 2C3< 3C6<
CHGZEN          1A7< 2C3< 3B6<
CHGLED          10A5< 23D4<
CHGOUT          1D1< 3D8<
CKEA            5C1< 5C3< 20C6<
CLK14M2         7A6< 9A6< 17D2<
CLK14M2A        13A5< 17D2<
CLK14M3         16A5< 17D2<
CLK32K          6B2< 10D6< 16D8< 11A1< 13A5< 20D1<
CLK48M          7A6< 17D2<
CLKEN           6B2< 10B3< 17D6<
CLKRUN *        6D5< 11A3< 20B1< 21C6< 22A3<
CLOSCD *        1B3< 15A8< 23A8<
COMIEN *        9B8< 18A7<
COMPSEL         7D3< 18A6<
COMTIEN         18A8< 18C2<
CPURST          6C2< 20A1<
CTS1            18A1< 22C8<
CTS1 *          9B7< 18A4<
CTS1L           18A3< 18A6< 21A5<
CTS2 *          9B8< 21A4<
CURAWM          1C8< 2C3<
DACK (5..0) *   7D3> 9C8< 16B5<
DCACTIVE        2B4< 4C5< 6C8<
DCD1            10A1< 22C8<
DCD1 *          9B7< 18A4<
DCD1L           10A3< 18A6< 21A4<
DCD2 *          9B8< 21A4<
DCIN            1D8< 2C3<
DCIN8           1D7< 21C4<
DCIN1           1A4< 1D4< 2D7< 2C6< 3C1< 4D5< 4D8<
                20B6< 20B8< 21C4<
DCIN2           1D3< 3D1< 16D6< 18D5< 19B5< 20D1<
                20D3<
DDCK            13C4< 21C5< 22B7<
DDDA            13C4< 21C5< 22C7<
DDVSCL *        6D5< 11C6< 13C8< 20C1< 21C7< 22B3<
DIR *           9D1< 22D3< 23D5<
DISLIC          2C4< 3D8<
DLOCK           7A3< 21C4<
DOCKED *        7D6< 21C5<
DRQ (5..0)      9D2> 7D6< 16A5< 16C3<
DRV0 *          9B1< 18A4< 22D3< 23D5<
DSKCHG *        9D7< 22D5< 23D7<
DSM1 *          7A7< 21C6<
DSP1USC         18D1< 23B5<
DSP2USC         18C1< 23B8<
DSPACPWR        18C1< 23B8<
DSPCAPS         18B1< 23B8<
DSPCD           18A1< 23B5<
DSPCHG          18C1< 23B5<
DSPCOM          18D2< 23D8<
DSPEN           2D3< 18B8<
DSPFD           18A1< 23D8<
DSPHD           18A1< 23B5<
DSPKEN *        16C8< 21B2<
DSPNUM          18B1< 23B8<
DSPVAR          18B1< 23D5<
DSPSCR          18A1< 23D5<
DSPSCSP         18B1< 23D8<
DSPVS           17A7< 18A1< 18B4< 18B6< 18C1< 18D1<
                18D3< 18D6< 18D8<
DSR1            18A1< 22C8<
DSR1 *          9B7< 18A4<
DSR1L           18A3< 18A6< 21A5<
DSR2 *          9B8< 21A4<
DTMG            15A2< 20A8<
DTR1            18A1< 22C8<
DTR1 *          9B1< 18A6<
DTR1L           18A3< 18A4< 21A4<
DTR2 *          9B1< 21A4<
ENAVDD          15A8< 15B7<
ERROR *         9D7< 22A8<
ERROR0 *        9B6< 21A5<
FANEN           7A3< 19B8<
FBAYINST *      7A7< 10C6< 23C7<
FBAYPWR *       7B3< 8A6<
FDDLOCK         7A3< 17A8<
FERR *          6B5< 20A3<
FIRIN           9A1< 19A2<
FMIC            16B7< 20B8<
FMICRIN         16B8< 20B6<
FPD (54..0)     16G6> 20B6<
FPVS            8D1< 22D3< 22D5<
FPVSNF          8B3< 9D7<
FQS0            17C6< 20A6<
FRAME *         6D5< 11C6< 13C8< 20C1< 21C7< 22B5<
GNT0 *          11C6< 20C1<
GNT1 *          20C1< 22B3<
GNT2 *          20B1< 21C6<
GNT3 *          20B1< 21C6<
GREEN           13D2< 21C5< 22C7<
GWRT *          9A7< 17A7<
HA (2..0)       8D2> 22B1< 22B3<
HCLK1           17D2< 20A6<
HCLK2           17D2< 20A4<
HCLK3           5C3< 5C5< 17C2<
HCLK4           5C1< 5C3< 17C2<
HD (15..0)      22B1> 8D6< 22B3<
HDZM            7D1< 22D5< 23D5<
HDACK *         8D2< 22B1<
HDCS1 *         8D4< 22B1<
HDCS3 *         8D4< 22D3<
HDINUSE *       7B8< 18A4< 22B3<
HDRAR *         7B3< 8A6<
HDRQ            8C8< 22B3<
HIOR *          8D2< 22B1<
HIORDY          8C8< 22B3<
HIOW *          8D2< 22B3<
HPVS            8A1< 22B1< 22B3<
HPVSNF          7C6< 8A2< 8D6<
HRST *          7A3< 22B1<
HSPKROT         7C3< 11A3< 16A6<
HSYNC *         13D1< 21C5< 22C7<
IGNNE *         6C2< 20A3<
INCHG           2B3< 18A7< 18C2<
INDEX *         9B7< 22D3< 23D5<
INIT            6C2< 20A1<
INIT *          9C1< 21A5< 22A8<
INTR            6B2< 20A1<
IOCHRDY         7B8< 9D2<
IOR *           7C1< 9C7< 18D6< 16B5<
IOW *           7C1< 9C7< 18D6< 16B5<
IRDY *          6D5< 11C6< 13C8< 20C1< 21C7< 22B3<
IREN *          7A1< 9A3<
IRQ (12..1) *   7B8< 18D3<
IRQ (15..3)     9D2> 7B8< 8B3< 16C3< 22B3<
IRTX            9A1< 19A6<
KBCA20M         5B5< 18D3<
KBCLK           10C8< 22A6<
KBCLK0          10C6< 21C6<
KBCNST *        6D5< 18D3<
KBCS *          7D3< 18D7<
KBCSMI *        6D6< 18D3<
KBDATA          10C8< 22A6<
KBDATA0         10C6< 21C6<
KBDSD (15..0)   18D9> 22D8<
KBDSI (7..0)    10C7< 22D8<
KBEXCS *        7B3< 18D7<
KBRCF           2D3< 18B6<
KBUS *          10C6< 22D8<
LAN/MDMACT *    17A7< 22A6<
LAN/MDMPWR *    18B3< 22A6<
LCDID (3..0)    14D5> 20A6<
LCDOFF *        15B7< 20A6<
LD0/G5          15A2< 20A6<
LD1/G4          15B2< 20A6<
LD2/G3          15A2< 20A8<
LD3/G2          15B2< 20A8<
LD4/B5          15A2< 20A8<
LD5/B4          15A2< 20A8<
LD6/B3          15A2< 20A8<
LD7/B2          15A2< 20A8<
LEFT            16C3< 22A3< 23C4<
LEFTAMP         17A4< 23C4<
LEV             19A8< 2B3<
LINCL           16B6< 23C4<
LINCR           16B6< 23C4<
LPVCC           15A6< 20A6< 20A8<
MA (13..0)      5C3> 5D1> 20C3> 5D3< 5D5< 20C6<
MAUXIN          17B7< 22A6<
MD (63..0)      20D9> 5D8< 20D6<
MDM/LANSLEEP *  6B2< 22A3<
MDMRIEN         10A8< 18B3<
MDT (63..0)     5D1> 5D3> 5D6> 5D3< 5D5<
MEMR *          7D1< 8A8< 8C2<
MEMW *          7C1< 8A8< 8C2<
MIDIIN          16B3< 23C2<
MIDIOUT         16B3< 23C4<
MOTO *          9B1< 22D3< 23D7<
MPVS            18D2< 22A6<
MRIDET *        10A8< 18D2< 17A8<
MSC             16A5< 23C4<
MSCLK           10C8< 22A6<
MSCLK0          10C6< 21C6<
MSD             16A5< 23C4<
MSDATA          10C8< 22A6<
MSDATA0         10C6< 21C6<
MWER *          5C3< 20B6<
MWED *          5C5< 20B6<
NMI             6B2< 20A1<
NUMLED          10D3< 18B4<
P16             15A2< 20A6<
P17             15A2< 20A6<
PAR             6A2< 11C6< 13C8< 20C1< 21C7< 22B5<
```

TATUNG CO. COMPUTER R&D DIV.	PCB: N5900 R00D	TITLE:	DATE: 02/09/1998	PAGE: 24 OF 30

PCDR00 *	7D6< 11A3<
PCDR01 *	7D6< 21C6<
PCFG1	7C6< 20B1<
PCGNT0 *	7D1< 11A3<
PCGNT1 *	7D1< 21C6<
PCICLK1	17B2< 23A4<
PCICLK2	6D5< 17D4<
PCICLK3	11C6< 13D6< 17C2< 22A5<
PCICLK5	17C2< 21C6<
PCICLKEN	6N2< 17B3<
PCIINTA	6B5< 11B3<
PCIINTB	6B5< 11B3<
PCIINTC	6B5< 21C6< 22A5<
PCIINTD	6A5< 13A5< 21C6<
PCSPK0	16B3< 17A7<
PD (7..0)	21A5< 9C7< 22B3<
PDCLK	10C8< 23C2<
PDDATA	10C8< 23C4<
PE	9B7< 22B8<
PE0	9B6< 21A5<
PERR *	11B6< 13C8< 21C7< 22D5<
PHLD *	6A2< 20C1<
PHLDA *	6D5< 20C1<
PHONECTCT *	16C8< 23C2<
PHSYNC	15B5< 20B8<
PID (3..0)	20C1< 20C3< 20D1< 20D3<
PLOCK *	6D6< 20C1< 21C7< 20D3<
PME *	10D3< 11A3< 22A3<
POWERGOOD	6A2< 6B2< 10D7<
PRACK#	6A5< 6A6< 19A6<
PREQ# *	7A7< 10B7< 23C4<
PRTCLK	9D4< 13D3<
PSD	2C2< 2C3< 4C8< 5A2< 5A3< 5A4< 5A5< 5B1< 5B3< 5D5< 5C1< 5C3< 5C5< 5D1< 5D2< 5D3< 5D5< 6A1< 6A6< 6A7< 6C6< 6D2< 6D2< 6D7< 7C1< 7D6< 7D7< 10A6< 10B4< 10B7< 10C2< 10D1< 10D3< 10D4< 10D5< 10D6< 10D7< 10D8< 11A6< 11B2< 11C2< 11D3< 11D7< 12D7< 13C3< 15A6< 15A8< 15B6< 19B6< 19C1< 19D5< 20B1< 20B3< 21C4< 22C3< 22C5<
PVDS	2C2< 6A2< 6B5< 6B6< 6C6< 6C8< 6D2< 6D5< 6D6< 7A6< 7B1< 7C8< 7D3< 7D7< 8B5< 8B6< 8C1< 9B1< 9C3< 9D2< 9D4< 9D7< 10C1< 10C7< 11D7< 15A8< 15B8< 16C8< 16D2< 17D8< 18B8< 19D3< 20A3< 20A4< 20A6< 20B1< 20B3< 20B4< 20B6< 20C1< 20C3< 20C4< 20C6< 20D4< 20D6< 23C2<
PVS	4B8< 6B6< 6C6< 7C1< 8B3< 11C2< 11D1< 16D3< 17B1< 19A3< 19B5< 19B7< 19C5< 19D2< 19D8< 21C4< 22C3< 22C5< 23D2<
PVSS	2D4< 6B6< 6D1< 7D8< 8B3< 8B6< 9A1< 9A3< 9C2< 10B1< 13A3< 13D3< 13D4< 15A8< 15B7< 16D6< 19C3< 20A1<
PV12	8A4< 8B4< 11C2< 19A7< 19D4< 19D5<
PVCCON	20B< 15A8<
PVDDC	13A2< 23C7<
PVFAN	19B5< 23A5<
PVFLPSEN	9A1< 22A8<
PVSYNC	15B5< 20B8<
PWCEN	4B2< 6B8<
PWRGALED	16B2< 23D4<
PWRIND	2B3< 16B2<
PWRIR	9A1< 19D4<
PWRSW *	2B7< 21C4< 23B5<
PWRYELED	10C1< 23C2<
R+	21C4< 22C3<
R-	21C4< 22C3<
R0	15B2< 20B8<
R1	15B2< 20B8<
R2	15B2< 20B8<
R3	15B2< 20A8<

R4	15B2< 20B8<
R5	15B2< 20A8<
RAS0 *	5C3< 20D6<
RAS1 *	5C3< 20D6<
RAS2 *	5C5< 20D3<
RAS3 *	5C5< 20D3<
RDATA *	9B7< 22D3< 23D7<
RED	13D2< 21C5< 22C7<
REFSUPLY	2D8< 3D3< 3C5< 18D6<
REQ (3..0) *	20C1< 6A5< 11D3< 21C6< 21C7< 22D5<
RI *	6A5< 6D6< 7A7< 10B7<
RI1	10A1< 22C8<
RI1 *	9B7< 10A4<
RI1L	10A3< 10A6< 21A5<
RI2 *	9B8< 21A4<
RIDE1 *	17A7< 22A3<
RIGHT	16B3< 23C4<
RIGHTAMP	17B4< 23C4<
ROMCS *	7B3< 8A8< 8C2<
RSMRST *	6A5< 28I<
RSPSW *	2A1< 10B3< 10D2< 17C7< 23A5<
RST *	6A2< 6C2< 20C1< 21C7< 22A3<
RSTDAV	6C2< 9D7< 16B5< 23C4<
RTCBATT	7D8< 22B6<
RTS1	10A1< 22C8<
RTS1 *	9B1< 10A6<
RTS1L	10A3< 10A4< 21A5<
RTS2 *	7A7< 9B1< 21A4<
RXD1	9B7< 10A4<
RXD1 *	10A1< 22C8<
RXD1L *	10A3< 10A6< 21A4<
RXD2	9B8< 21A4<
SA (10..0)	7C1< 8B8< 8D2< 9D7< 10D4< 16C5<
SCASA *	5C1< 20C4<
SCASB *	5C3< 20C4<
SCI *	7A7< 10D3<
SCRLOKLED	10D3< 18B4<
SD (7..0)	8B4< 8B6< 7C6< 8D2< 9D7< 10D7< 16C5<
SERBUFEN	7A3< 10A6< 12D7<
SERR *	6D5< 11B3< 13C8< 20C1< 21C7< 22D3<
SHA (2..0)	8C2< 23C5< 23C7<
SHD (15..0)	23C5< 8C8<
SHDACK *	8C2< 23C7<
SHDCS1 *	8C4< 23C5<
SHDCS3 *	8C4< 23C5<
SHDINUSE *	7B8< 10A4< 23C7<
SHDREQ	8B8< 23C7<
SHFCLK	15B5< 20B8<
SHIOR *	8C2< 23C5<
SHIORDY	8B8< 23C5<
SHIOW *	8C2< 23C7<
SHIRQ	8B3< 23C5<
SHIROEN	7D3< 8B4<
SHAVS	8A1< 23C7< 23D5< 23D7<
SHAVSAV	7C7< 8D2< 8D7< 10D4<
SHXST *	7B3< 23C8<
SIDL *	9B1< 22D5< 23D7<
SIRIN	9B1< 19A2<
SIRO	6B5< 11A3< 21C6<
SLC1	9B7< 22A8<
SLCT0	9B6< 21A5<
SLIN *	9C1< 21A5< 22A8<
SMBCLKRT *	2C3< 10B3< 10D2<
SMBCLK	2B5< 10D3< 20B1<
SMBDATA	2D5< 10D3< 20B1<
SMI *	6B2< 20A1<
SNSBAT1	18I< 2C8< 3C8<
SNSBAT2	18I< 2C8< 3A8< 3D8<
SNSIO	6C1< 17D8< 20A1< 20D3<
SNSIOR	17D2< 17D6<
SNSSUBBAT	2B6< 3C3<
SOFTOFF *	2B3< 6A7< 6B2<
SPCIRST *	7B3< 21C7<

SPKR	7B2< 7D3< 16A7<
SPKREN *	16D3< 17B1< 17B6<
SPLN	17A2< 22B6<
SPLP	17A2< 22B6<
SPRN	17B2< 23D8<
SPRP	17B2< 23A8<
SRASA *	5C3< 20C6<
SRASB *	5C5< 20C6<
SRBTN *	2C4< 6A5<
STEP *	9B1< 22D3< 23D7<
STNCNT	10C2< 20B6<
STOP *	6D5< 11C6< 13C8< 20C1< 21C7< 22B5<
STPCLK *	6B2< 20A1<
STROBE *	9C1< 21A5< 22D8<
SUBBAT	3C3< 22C6<
SUBBATCHG	2C3< 3B3<
SUBBATON	2C3< 3C3<
SUSPEND	10D7< 18B2<
SUSPNRST *	6A1< 11B3< 11C6< 13D8<
SUSTAT *	2B6< 6B2< 10D8< 11B3< 18A2< 18B5< 20B1< 21C4< 23D2<
SUSTPWR *	6A6< 6B2< 6B6< 15C0< 22A5<
SWPWROFF *	8A6< 15A0< 19D3<
T+	21C4< 22C5<
T-	21C4< 22C5<
TC	7D1< 9C7<
TC1	1A7> 22A7<
TC2	1A7> 22B7<
TP61	6C3<
TP62	6C3<
TP63	6C3<
TP64	6C3<
TP65	6C3<
TP66	6C3<
TP67	6B3<
TP71	7C5<
TP72	7C5<
TP73	7C5<
TP74	7C5<
TP75	7C5<
TP76	7C5<
TP77	7C5<
TP78	7C5<
TP79	7A5<
TP131	13B5<
TP132	13B5<
TP133	13B5<
TP134	13B5<
TP135	13A5<
TP136	13A5<
TP137	13A5<
TP138	13A5<
TP139	13A5<
TP141	14C8<
TP142	14C8<
TP143	14C8<
TP144	14C8<
TP145	14C8<
TP146	14C8<
TP147	14C8<
TP148	14C8<
TP149	14C8<
TP710	7A5<
TP711	7D3<
TP712	7D3<
TP713	7D3<
TP714	7D3<
TP715	7C3<
TP716	7C3<
TP717	7C3<
TP719	7A5<
TP721	7B3<
TP723	7B3<
TP724	7D3<

TP725	7A8<
TP1310	13A5<
TP1311	13A5<
TP1312	13A5<
TP1313	13A5<
TP1314	13A5<
TP1315	13A5<
TP1316	13C8<
TP1317	13A8<
TP1410	14C8<
TP1411	14C8<
TP1412	14B8<
TP1413	14B8<
TP1414	14B8<
TP1415	14B8<
TP1416	14B8<
TP1417	14B8<
TP1418	14B8<
TP1419	14B8<
TP1420	14B8<
TP1421	14B8<
TP1422	14B8<
TP1423	14B8<
TP1424	14B8<
TP1425	14B8<
TP1426	14B8<
TP1427	14B8<
TP1428	14B8<
TP1429	14B8<
TP1430	14B8<
TP1431	14B8<
TP1432	14B8<
TP1433	14B8<
TP1434	14B8<
TP1435	14A8<
TP1436	14A8<
TP1437	14A8<
TP1438	14A8<
TP1439	14A8<
TP1440	14A8<
TP1441	14A8<
TP1442	14A8<
TP1443	14A8<
TP1444	14A8<
TP1445	14C3<
TP1446	14C3<
TP1447	14C3<
TP1448	14C3<
TP1449	14C3<
TP1450	14C3<
TP1451	14C3<
TP1452	14C3<
TP1453	14C3<
TP1454	14C3<
TP1455	14C3<
TP1456	14C3<
TP1457	14C3<
TP1458	14C3<
TP1459	14C3<
TP1460	14B3<
TP1461	14B3<
TP1462	14B3<
TP1463	14B3<
TP1464	14B3<
TP1465	14B3<
TP1466	14B3<
TP1467	14B3<
TP1468	14B3<
TP1469	14B3<
TP1470	14B3<
TP1471	14B3<
TP1472	14B3<
TP1473	14B3<
TP1474	14B3<

TP1475	14B3<
TP1476	14B3<
TP1477	14B3<
TP1478	14B3<
TP1479	14B3<
TP1480	14B3<
TP1481	14B3<
TP1482	14B3<
TRDY *	6D5< 11C6< 13C8< 20C1< 21C7< 22B6<
TRK00 *	987< 2203< 2305<
TXD1	981< 10A6<
TXD1 *	10A1<22C8<
TXD1L *	10A3< 10A4< 21A4<
TXD2	981< 21A4<
UD0/G1	1582< 20A6<
UD1/G0	1582< 20A6<
UD2	1582< 20A6<
UD3	1582< 20A6<
UD4/B1	1582< 20A6<
UD5/B0	1582< 20A6<
UD6	1582< 20B6<
UD7	1582< 20B6<
UAXXCRXEG *	7B8< 21C4<
USB0+	7B8< 24C6<
USB0-	7B8< 7B6< 21C5<
USB1+	7B8< 7B6< 21C5<
USB1-	7B8< 7B6< 21C5<
USBOCB *	7C6< 19B1<
USBOCI *	7C6< 21C5<
USBPAEN	7B3< 19D2<
USBPAJN	7B4< 19C1<
USBXCCD	19B1< 22C6<
VCCRTC	2A8< 7D4<
VGASLEEP *	6B2< 13A5<
VLBAT *	2B2< 6D5< 7B8<
VMD <0..3>	14D7
VOLDOWN	7D3< 16B5<
VOLUP	7D3< 16B5<
VRDY *	13A8< 13D4<
VREF	1A7< 2B7< 2D7< 3C8< 6A7< 6C7<
VREF2.5S	6B8< 7C2< 17B6<
VRON	6B6< 26B1<
VRPWRGOOD	4C2< 26B1<
VSYNC *	13D1< 21C5< 22C7<
WAIT	6A2< 16B3<
WDATA *	9B1< 22C3< 23D5<
WDATA -	9B1< 22D5< 23D5<
WGATE *	7B6< 9B2<
XA0	16A3< 21B2<
XA1	16A3< 21B2<
XA2	16A3< 21B2<
XA3	16A3< 21B2<
XSC	16A3< 21B2<
XSD	16A3< 21B2<

TATUNG CO. COMPUTER R&D DIV.	PCB: N5900 R00D	TITLE:	DATE: 02/09/1998	PAGE: 26 OF 30

*** Unit Cross-Reference ***
--- for the entire design --

C1	CAP	4C7
C2	CAP+	4C7
C3	CAP	1C6
C4	CAP	1D5
C5	CAP	4B2
C6	CAP	4B2
C7	CAP+	1D4
C8	CAP	1D5
C9	CAP	1C4
C10	CAP	4A7
C11	CAP	1BC7
C12	CAP	15A4
C13	CAP	1D6
C14	CAP	15A4
C15	CAP	15A4
C16	CAP	15A4
C17	CAP	15A4
C18	CAP	15A3
C19	CAP+	4A7
C20	CAP	15A3
C21	CAP	15A3
C22	CAP	19D5
C23	CAP	19C4
C24	CAP	19C4
C25	CAP	13C5
C26	CAP	13D5
C27	CAP	13C5
C28	CAP	13C5
C29	CAP	13C4
C30	CAP	2C7
C31	CAP	2C7
C32	CAP	13D3
C33	CAP	13D3
C34	CAP	13D2
C35	CAP	13D3
C36	CAP	2A6
C37	CAP	13B2
C38	CAP	2A6
C39	CAP	13B5
C40	CAP	13B4
C41	CAP	13B4
C42	CAP	19C7
C43	CAP	8C7
C44	CAP	8C3
C45	CAP	8C3
C46	CAP	7D5
C47	CAP	7C2
C48	CAP	6B7
C49	CAP	8B6
C50	CAP	6B2
C51	CAP	6B2
C52	CAP	8A1
C53	CAP	7D7
C54	CAP	7D4
C55	CAP	17C3
C56	CAP	7D7
C57	CAP	6C1
C58	CAP	17C3
C59	CAP	17C3
C60	CAP	17C4
C61	CAP	17B4
C62	CAP	6C2
C63	CAP	13A3
C64	CAP	17D7
C65	CAP	17B3
C66	CAP	6D3
C67	CAP	6D2
C68	CAP	6C2
C69	CAP	13A3
C70	CAP	17B3
C71	CAP	13A3
C72	CAP	17D7
C73	CAP	17C2
C74	CAP	17B3
C75	CAP	17B4
C76	CAP	17C7
C78	CAP	18A4
C79	CAP	5A3
C80	CAP	5A4
C81	CAP	8D5
C82	CAP	5A4
C83	CAP	12B1
C84	CAP	12B1
C85	CAP	11D3
C86	CAP	5A3
C88	CAP	12D4
C89	CAP	17B3
C90	CAP	17D2
C91	CAP	9C2
C92	CAP	12D4
C93	CAP	12D4
C94	CAP	9C2
C95	CAP	12C8
C96	CAP	17B3
C97	CAP	17B4
C98	CAP	9A6
C100	CAP	9A5
C101	CAP	5A4
C102	CAP	17B6
C104	CAP	9A5
C105	CAP	11D4
C106	CAP	9A6
C107	CAP	11D3
C108	CAP	17A3
C109	CAP	17B3
C110	CAP	9A6
C111	CAP	9A5
C112	CAP	9A5
C113	CAP	5A4
C114	CAP	17A3
C115	CAP	9A5
C116	CAP	12D4
C117	CAP	12B1
C118	CAP	9A6
C119	CAP	5A3
C120	CAP	11A6
C121	CAP	16D2
C122	CAP	16A5
C123	CAP	17A4
C124	CAP	5A4
C125	CAP	16D3
C126	CAP	16B2
C127	CAP	5A2
C128	CAP	9D3
C129	CAP	16B3
C130	CAP	16B3
C131	CAP	16B5
C132	CAP	16B5
C133	CAP	16D4
C134	CAP	16D2
C135	CAP	16D5
C137	CAP	8A1
C139	CAP	9D3
C140	CAP	5A3
C141	CAP	16D6
C142	CAP	16D6
C143	CAP	16B6
C145	CAP	19D4
C146	CAP	5A3
C147	CAP	5A4
C149	CAP+	19A3
C150	CAP	16C5
C151	CAP	16D3
C152	CAP	19D1
C153	CAP	7D8
C154	CAP	7D8
C155	CAP	4D4
C156	CAP	1C6
C157	CAP	1B4
C158	CAP	4C4
C159	CAP	4D3
C160	CAP	1C6
C161	CAP	4D3
C162	CAP	4C3
C163	CAP	8B2
C164	CAP	4D2
C165	CAP	4D2
C167	CAP	15B3
C168	CAP	3A4
C169	CAP	15B3
C170	CAP	15A4
C171	CAP	15A4
C172	CAP	15A4
C173	CAP	15A4
C174	CAP	3C4
C175	CAP	15B3
C176	CAP	15A3
C177	CAP	15A3
C178	CAP	15A3
C179	CAP	15A2
C180	CAP	15A3
C181	CAP	15A3
C182	CAP	18C7
C183	CAP	15A2
C184	CAP	15B6
C185	CAP	15A2
C186	CAP	15B6
C187	CAP	19B2
C188	CAP	15A2
C189	CAP	15A2
C190	CAP	15B7
C191	CAP	3A5
C192	CAP	15B2
C193	CAP	3C5
C194	CAP	15A6
C196	CAP	13C5
C197	CAP	15C6
C198	CAP	19B1
C199	CAP	3A8
C200	CAP	2D7
C201	CAP	2A7
C202	CAP	1A5
C203	CAP	2B7
C204	CAP	2C4
C205	CAP	19C5
C206	CAP	13B5
C207	CAP	6C6
C208	CAP	8B6
C209	CAP	13B5
C210	CAP	19D6
C211	CAP	6A6
C212	CAP	7C3
C213	CAP	6A6
C214	CAP	19C4
C215	CAP	19C3
C216	CAP	7D5
C217	CAP	15A7
C218	CAP	6B8
C219	CAP	13D2
C220	CAP	13C3
C221	CAP	19B5
C222	CAP	13C3
C223	CAP	17D7
C224	CAP	8A5
C225	CAP	13D1
C226	CAP	8C3
C227	CAP	8C3
C228	CAP	13D1
C229	CAP	13C4
C230	CAP	17C2
C231	CAP	7A6
C232	CAP	7A6
C233	CAP	17D7
C234	CAP+	19D5
C235	CAP+	19D5
C236	CAP	11C3
C237	CAP	10B4
C238	CAP	10A6
C239	CAP	10B4
C240	CAP	10A6
C241	CAP	11A2
C242	CAP	11A2
C243	CAP	11C3
C244	CAP	12B1
C245	CAP	11A1
C246	CAP	11A1
C247	CAP	11C2
C248	CAP	19A6
C249	CAP	11D3
C250	CAP	19B5
C251	CAP	5A4
C252	CAP	17C7
C253	CAP	19B5
C255	CAP	17B6
C256	CAP	11D3
C257	CAP	17A6
C258	CAP	17A6
C260	CAP	9A6
C261	CAP	16D2
C262	CAP	16C2
C263	CAP	16D6
C264	CAP	16B5
C265	CAP	16B3
C266	CAP	16B2
C267	CAP	16D6
C268	CAP+	16B2
C269	CAP	16D5
C271	CAP+	16D5
C272	CAP	19A3
C273	CAP	19A3
C274	CAP	19A4
C275	CAP	19A3
C276	CAP	13B5
C277	CAP	13B5
C278	CAP	15A5
C361	CAP	10B7
C362	CAP	10B7
C363	CAP	10B7
C364	CAP	10B7
C366	CAP	10D4
C373	CAP	8C1
C375	CAP	17D6
C376	CAP	10B6
C377	CAP	16A6
C378	CAP	19C2
C379	CAP	19C1
C380	CAP	2D5
C381	CAP	6A8
C382	CAP	10D3
C383	CAP	10D3
C384	CAP	3C8
C385	CAP	3A8
C390	CAP	8C8
C391	CAP	8B8
C392	CAP	17C2
C393	CAP	1C5
C394	CAP	1D1
C395	CAP	1D1
C396	CAP	1D1
C397	CAP	1D1
C398	CAP	1D2
C399	CAP	1D2
C400	CAP	1D2
C401	CAP	22A3
D1	EA	1D6

D2	DIODE	1D4
D3	DIODE	4D3
D4	ZDIODE	4A6
D5	ZDIODE	3C1
D6	ZDIODE	3D5
D7	ZDIODE	3D5
D8	HSM2835C	3C5
D9	ZDIODE	4A8
D10	HSM2835C	3D6
D11	DIODE	2D8
D12	HSM2835C	7D7
D13	DIODE	7D8
D15	DIODE	15A7
D18	DIODE	6A6
D19	DIODE	18A8
D23	DIODE	6A6
D24	DIODE	19A5
D25	HSM2835C	17B6
D27	DIODE	9D3
D28	HSM2835C	16D7
D29	DIODE	16C8
D30	DIODE	16C7
D31	DIODE	16C8
D32	DIODE	16D7
D33	ZDIODE	4C6
D35	ZDIODE	4C6
D37	DIODE	1D1
D38	DIODE	3D3
D39	HSM2835C	3A5
D40	DIODE	3D4
D41	HSM2835C	2A3
D42	DIODE	2D8
D43	HSM2835C	6C8
D44	ZDIODE2	13C3
D45	ZDIODE2	13C4
D46	ZDIODE2	13C4
D47	ZDIODE	19D6
D51	DIODE	2D5
D52	DIODE	6A7
D58	DIODE	4D4
D59	DIODE	4D3
D61	DIODE	6D1
D62	DIODE	6D6
D63	DIODE	6A6
D64	DIODE	2D3
F1	HOLE	23H3
F2	HOLE	23H2
F3	HOLE	23H2
F4	FUSE54P	3C3
F5	FUSE54P	3C7
F6	FUSE54P	3B7
F7	HOLE	23A2
F8	HOLE	23A2
F9	FUSE54P	19D8
F10	FUSE54P	7D6
F11	FUSE54P	19B6
F12	FUSE54P	8A2
F13	FUSE54P	13B3
F14	HOLE	23A2
F15	HOLE	23A1
F16	HOLE	23A1
F17	HOLE	23A1
F18	FUSE54P	8A3
F19	HOLEA	23A3
F20	HOLEA	23A2
F21	HOLE	23A1
F22	FUSE54P	1D6
F25	FUSE54P	1D3
F26	FUSE54P	4C7
F27	FUSE54P	4B7
FL1	DSS310	1B7
FL2	NFB	8B3
FL3	NFB	19B3
FL4	NFB	19B1

H1	HOLE	23B3
H2	HOLE	23B2
H3	HOLE	23B2
H4	HOLE	23B2
J1	PC	22D0
J2	USB	22C5
J3	FDD	22D4
J4	SPE	22B5
J5	DOCK	21B2
J6	LCD	20C8
J7	LAN	22C4
J8	DUR	22A7
J9	FAB	23D7
J10	FAN	23B4
J11	CAT	22C7
J12	DUAR	22B7
J13	MMO	20D3 20D5
J14	SCR	22C6
J15	MOLE	12C2 12D6
J16	RTC	22D5
J17	SW	23B7
J18	SUB	22C5
J19	KEY2	22D7
J20	KEY	22D8
J21	PAT	22B8
J22	MOD	22B2
J23	MAT	22C3
J24	MOU	22A5
J25	SODIMM	5B4
J26	SODIMM	5C2
L1	CHOCK	1D3
L2	CHOCK	15B5
L3	CHOCK	15D5
L4	CHOCK	15C6
L5	CHOCK	15B6
L8	CHOCK	16B8
L9	CHOCK	13D5
L10	CHOCK	2A2
L11	CHOCK	2B2
L12	CHOCK	2B2
L13	CHOCK	2B2
L14	CHOCK	13B4
L16	CHOCK	17D5
L17	CHOCK	17D4
L18	CHOCK	17D4
L19	CHOCK	17C4
L20	CHOCK	17C4
L21	CHOCK	17D4
L22	CHOCK	17D4
L23	CHOCK	17C4
L24	CHOCK	17C4
L25	CHOCK	17D4
L26	CHOCK	17D7
L27	CHOCK	11C1
L28	CHOCK	11C1
L29	CHOCK	11C1
L30	CHOCK	9B7
L31	CHOCK	9C2
L32	CHOCK	9C2
L33	CHOCK	9B7
L34	CHOCK	9B7
L36	CHOCK	16B6
L41	CHOCK	7D8
L42	CHOCK	7D8
L43	CHOCK	4C6
L44	CHOCK	4D6
L46	CHOCK	15A5
L47	CHOCK	15A5
L48	CHOCK	15B5
L49	CHOCK	15C6
L50	CHOCK	15B7
L53	CHOCK	13B5
L54	CHOCK	13C5
L55	CHOCK	19D2

L56	CHOCK	13B5
L57	CHOCK	13D3
L58	CHOCK	13D3
L59	CHOCK	13D3
L60	CHOCK	13D4
L61	CHOCK	17D7
L62	CHOCK	13D2
L63	CHOCK	17D5
L64	CHOCK	13C5
L65	CHOCK	19D6
L66	CHOCK	11C1
L70	CHOCK	10C7
L71	CHOCK	10C7
L72	NFM60	10B2
L73	NFM60	8D2
L74	NFM60	8A2
L75	NFM60	8A2
L76	NFM60	15A6
L77	CHOCK	17D7
L78	NFM60	19C2
L79	CHOCK	17D5
PL1	BP4L	15A5
PL2	BP4L	15A5
PL3	BP4L	15B5
PL4	BP4L	15B5
PL5	BP4L	15B5
PL9	BP4L	17B0
PL61	BP4L	10C7
PL62	BP4L	10A2
PL63	BP4L	10A2
PR1	BP4R	9D7
PR2	BP4R	13D4
PR3	BP4R	2C5
PR4	BP4R	2C2
PR5	BP4R	14B3
PR6	BP4R	14D6
PR7	10P8R	8D7
PR8	10P8R	8B5
PR9	BP4R	7A8
PR12	BP4R	8D4
PR13	BP4R	12D[illegible]
PR14	BP4R	12D4
PR15	10P8R	11D7
PR17	10P8R	12D0
PR18	10P8R	12C4
PR19	BP4R	12C1
PR20	BP4R	9C3
PR21	10P8R	9D5
PR22	BP4R	16B3
PR23	BP4R	7D6
PR24	BP4R	9D6
PR25	BP4R	9C5
PR26	BP4R	9B5
PR27	BP4R	9C4
PR28	BP4R	16B6
PR29	BP4R	9C3
PR31	BP4R	9D6
PR32	BP4R	6D5
PR33	10P8R	6B5
PR34	10P8R	7C7
PR35	BP4R	6C4
PR36	10P8R	8D5
PR37	10P8R	7C6
PR38	BP4R	7D3
PR39	BP4R	7C6
PR40	BP4R	7D6
PR41	BP4R	12C4
PR42	BP4R	18A2
PR44	BP4R	15A5
PR61	10P8R	10D2
PR62	BP4R	10C6
PR63	BP4R	10C7
PR65	10P8R	6D5
PR66	10P8R	6C2

Q1	HAT2020R	4C6
Q2	HAT2020R	4C6
Q3	NFET	1C3
Q4	NFET	1C6
Q5	HAT2020R	4D6
Q6	HAT2020R	4A6
Q7	RPNP	1D5
Q8	NFET	1B6
Q10	HAT1020R	3D5
Q11	HAT1020R	3D4
Q12	HAT1020R	3B5
Q13	HAT1020R	3B4
Q14	RNPN	3A7
Q15	NFET	3A7
Q16	NFET	3A6
Q17	HAT2020R	15A7
Q19	PNP	2D8
Q24	NFET	19C6
Q25	NFET	19D8
Q26	RNPN	15A7
Q27	RNPN	7C2
Q28	HAT	19B7 19D7
Q29	RNPN	8A5
Q30	HAT2020R	8B4
Q31	RNPN	16A6
Q32	RPNP	10C2
Q33	RPNP	16C7
Q34	RNPN	18A8
Q35	PNP	16D5
Q36	NFET	16C6
Q37	PNP	16D5
Q38	NFET	16C6
Q40	NFET	4D2
Q41	PNP	4D2
Q42	RNPN	1C7
Q43	PFET	3C2
Q44	PNP	10C6
Q45	NFET	18C7
Q46	RNPN	3C6
Q47	RNPN	3D6
Q48	NFET	3C7
Q49	RNPN	3B2
Q50	NFET	3B7
Q51	RNPN	3C7
Q52	PNP	3D2
Q53	NFET	3B7
Q54	HAT2020R	19C5
Q55	PNP	2D8
Q56	NFET	2B6
Q57	HAT2020R	19D5
Q58	RNPN	7B2
Q59	NFET	8B4
Q60	HAT2020R	8A4
Q61	RNPN	8A5
Q62	NFET	10A7
Q65	NFET	10A8
Q66	NFET	18A4
Q67	NFET	18A3
Q69	NFET	18A4
Q70	RPNP	18B6
Q71	RNPN	10A6
Q81	RPNP	10B3
Q82	NPN	2D5
Q83	PNP	2D5
Q84	RNPN	7A2
Q85	RNPN	10A7
Q86	RNPN	16A6
Q87	NFET	17B4
Q88	NFET	17A5
Q89	PFET	17B2
Q90	NFET	19D2
Q91	HAT1025R	19C1 19D3
Q93	RNPN	16D4
Q94	NFET	2D4

TATUNG CO. COMPUTER R&D DIV.	PCB: N5900 R00D	TITLE:	DATE: 02/09/1998	PAGE: 28 OF 30

Q95	RPAN	3C3
R1	RES	7D8
R2	RES	1D5
R3	RES	1C4
R4	RES	9C7
R5	RES	1C5
R6	RES	1D6
R7	RES	4B2
R8	RES	4C2
R9	RES	1C6
R10	RES	1B4
R11	RES	1C7
R12	RES	1D5
R13	RES	1B6
R14	RES	2B3
R15	RES	1B6
R16	RES	4B7
R17	RES	3B4
R18	RES	3C2
R19	RES	5D7
R21	RES	3A7
R22	RES	3D7
R23	RES	3C6
R24	RES	3A6
R25	RES	3A6
R26	RES	3A6
R27	RES	1586
R28	RES	1981
R29	RES	1981
R30	RES	13C5
R31	RES	13C5
R32	RES	2C7
R33	RES	2C7
R34	RES	2C7
R35	RES	13C5
R36	RES	2B8
R37	RES	15C0
R38	RES	2B2
R39	RES	2B2
R40	RES	2B2
R41	RES	2B6
R42	RES	2B4
R43	RES	2B6
R44	RES	2B2
R45	RES	2B6
R46	RES	2B6
R49	RES	1384
R50	RES	8B0
R51	RES	8D7
R53	RES	8C3
R54	RES	8C3
R55	RES	6A7
R56	RES	6A0
R57	RES	15A7
R58	RES	1586
R59	RES	1987
R60	RES	7D7
R62	RES	6D1
R63	RES	7D7
R64	RES	8A4
R65	RES	17D5
R66	RES	17D6
R67	RES	1587
R68	RES	17C5
R69	RES	17C5
R70	RES	8D3
R71	RES	8D3
R72	RES	17D5
R73	RES	17D7
R74	RES	17D6
R75	RES	2046
R76	RES	1207
R77	RES	2081
R78	RES	11A1

R79	RES	8C8
R80	RES	8B4
R81	RES	11A1
R82	RES	11A2
R83	RES	11A1
R86	RES	17B4
R87	RES	17B4
R88	RES	17B3
R89	RES	9B5
R90	RES	17B6
R91	RES	17B6
R92	RES	11D4
R93	RES	11D4
R94	RES	17A4
R95	RES	17A5
R96	RES	17A5
R98	RES	17A3
R99	RES	17A3
R100	RES	7D6
R102	RES	16A8
R103	RES	17A4
R104	RES	10C1
R105	RES	16D5
R106	RES	9C2
R107	RES	9C3
R108	RES	16A8
R109	RES	16C6
R110	RES	16C6
R111	RES	16D5
R112	RES	19A3
R113	RES	16C6
R114	RES	16D4
R115	RES	7D8
R116	RES	4C7
R117	RES	1C4
R118	RES	4D2
R119	RES	1B5
R121	RES	4C4
R122	RES	1D5
R123	RES	1D2
R124	RES	1A5
R125	RES	1A4
R126	RES	18C7
R127	RES	3C3
R128	RES	3C2
R129	RES	3D6
R130	RES	3C4
R131	RES	3B6
R132	RES	3C7
R133	RES	18D6
R134	RES	18D8
R135	RES	18D7
R136	RES	18D7
R137	RES	18D7
R138	RES	1586
R139	RES	3C2
R140	RES	3B6
R141	RES	3B7
R142	RES	3B6
R143	RES	1587
R144	RES	13C5
R145	RES	2C7
R146	RES	2D7
R147	RES	2D8
R148	RES	2D6
R149	RES	2C6
R150	RES	2D7
R151	RES	2D8
R152	RES	1A5
R153	RES	1D6
R154	RES	2D8
R155	RES	2D8
R156	RES	2B7
R157	RES	2C3

R158	RES	2B3
R159	RES	19C7
R160	RES	19D7
R161	RES	13B4
R162	RES	6C6
R163	RES	6C7
R164	RES	19D4
R165	RES	7D8
R166	RES	7C1
R167	RES	7D7
R168	RES	7D7
R169	RES	19B7
R170	RES	15B7
R171	RES	15A7
R172	RES	8C4
R173	RES	8C4
R174	RES	6B6
R175	RES	7D7
R176	RES	7D7
R177	RES	7C8
R178	RES	7A6
R179	RES	7A6
R181	RES	8D7
R182	RES	7C3
R183	RES	7C3
R184	RES	7D2
R187	RES	7C7
R188	RES	7C7
R189	RES	7C6
R190	RES	19A6
R191	RES	12C4
R192	RES	11C6
R193	RES	11C7
R194	RES	17B3
R199	RES	9A1
R200	RES	16A5
R201	RES	16D3
R202	RES	16C3
R203	RES	16C2
R204	RES	18D6
R205	RES	18D6
R206	RES	16D4
R207	RES	9A3
R208	RES	19A4
R209	RES	19A4
R361	RES	10D6
R362	RES	10B2
R363	RES	10D1
R364	RES	10C1
R372	RES	6C2
R373	RES	6C2
R377	RES	10C3
R378	RES	10C3
R379	RES	19B0
R380	RES	17B5
R382	RES	17B5
R383	RES	17B5
R385	RES	15A8
R386	RES	6C1
R387	RES	11D1
R389	RES	2B1
R390	RES	2A1
R391	RES	2D6
R392	RES	2D5
R393	RES	2D5
R394	RES	6D6
R395	RES	6A2
R397	RES	7D2
R398	RES	7A3
R399	RES	16D4
R400	RES	16A6
R401	RES	16A5
R402	RES	16A8
R404	RES	19D1

R405	RES	19C2
R406	RES	6D6
R407	RES	8D6
R408	RES	8C1
R410	RES	17C7
R411	RES	6C7
R412	RES	6D6
R413	RES	6B7
R414	RES	10D5
R415	RES	11A2
R416	RES	11A2
R417	RES	8B6
R418	RES	10C6
R419	RES	2C3
R420	RES	8C8
R421	RES	8B0
R422	RES	5D7
R423	RES	5D7
R424	RES	5D7
R425	RES	5D7
R426	RES	5D7
R427	RES	5D7
R428	RES	5C7
R429	RES	5C7
R430	RES	5C7
R431	RES	5C7
R432	RES	5C7
R433	RES	5C7
R434	RES	5C7
R435	RES	5C7
R436	RES	5C7
R437	RES	5C7
R438	RES	5C7
R439	RES	5C7
R440	RES	5C7
R441	RES	5C7
R442	RES	5C7
R443	RES	5C7
R444	RES	5C7
R445	RES	5C7
R446	RES	5C7
R447	RES	5C7
R448	RES	5C7
R449	RES	5C7
R450	RES	5B7
R451	RES	5B7
R452	RES	5B7
R453	RES	5B7
R454	RES	5B7
R455	RES	5B7
R456	RES	5B7
R457	RES	5B7
R458	RES	5B7
R459	RES	5B7
R460	RES	5B7
R461	RES	5B7
R462	RES	5B7
R463	RES	5B7
R464	RES	5B7
R465	RES	5B7
R466	RES	5B7
R467	RES	5B7
R468	RES	5B7
R469	RES	5B7
R470	RES	5B7
R471	RES	5B7
R472	RES	5B7
R473	RES	5B7
R474	RES	5A7
R475	RES	5A7
R476	RES	5A7
R477	RES	5A7
R478	RES	5A7
R479	RES	5A7

TATUNG CO. COMPUTER R&D DIV.

PCB: N5900 R00D

TITLE:

DATE: 02/09/1998