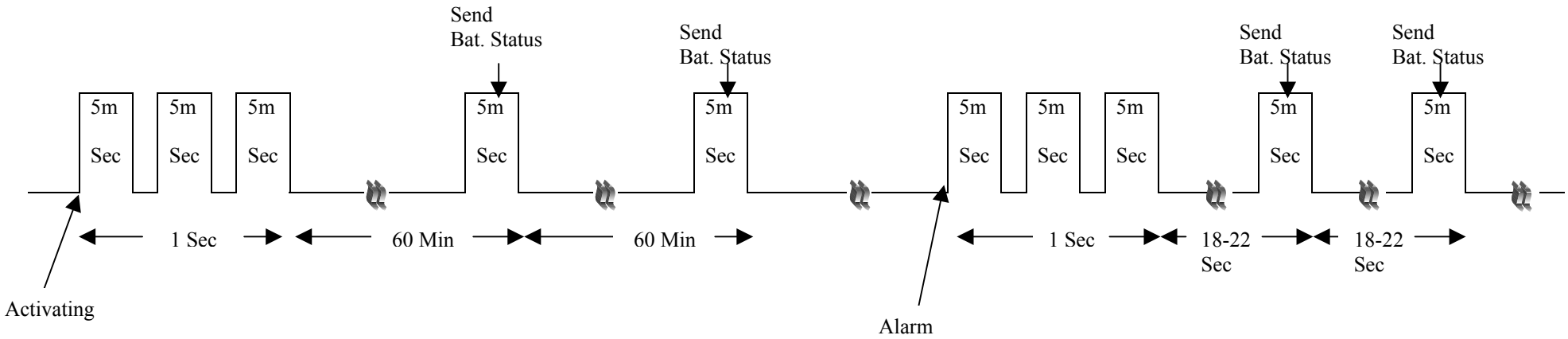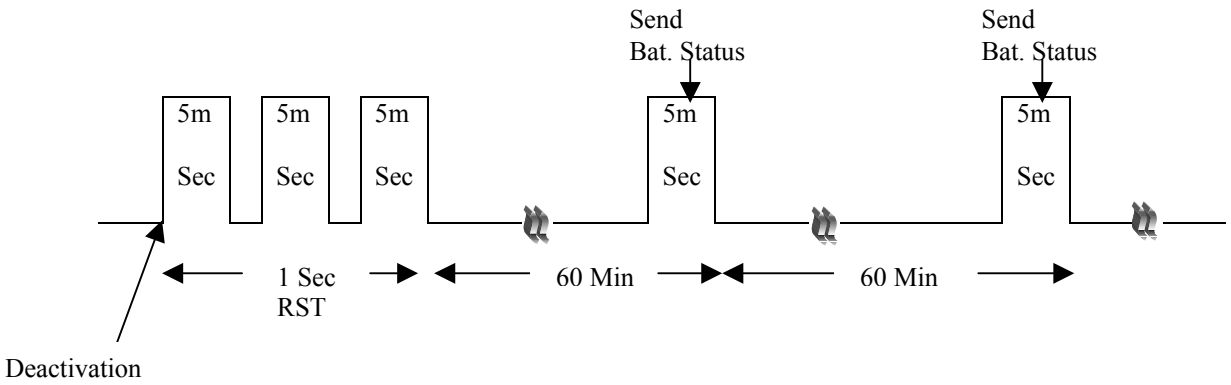FDU-800 – Time Diagram