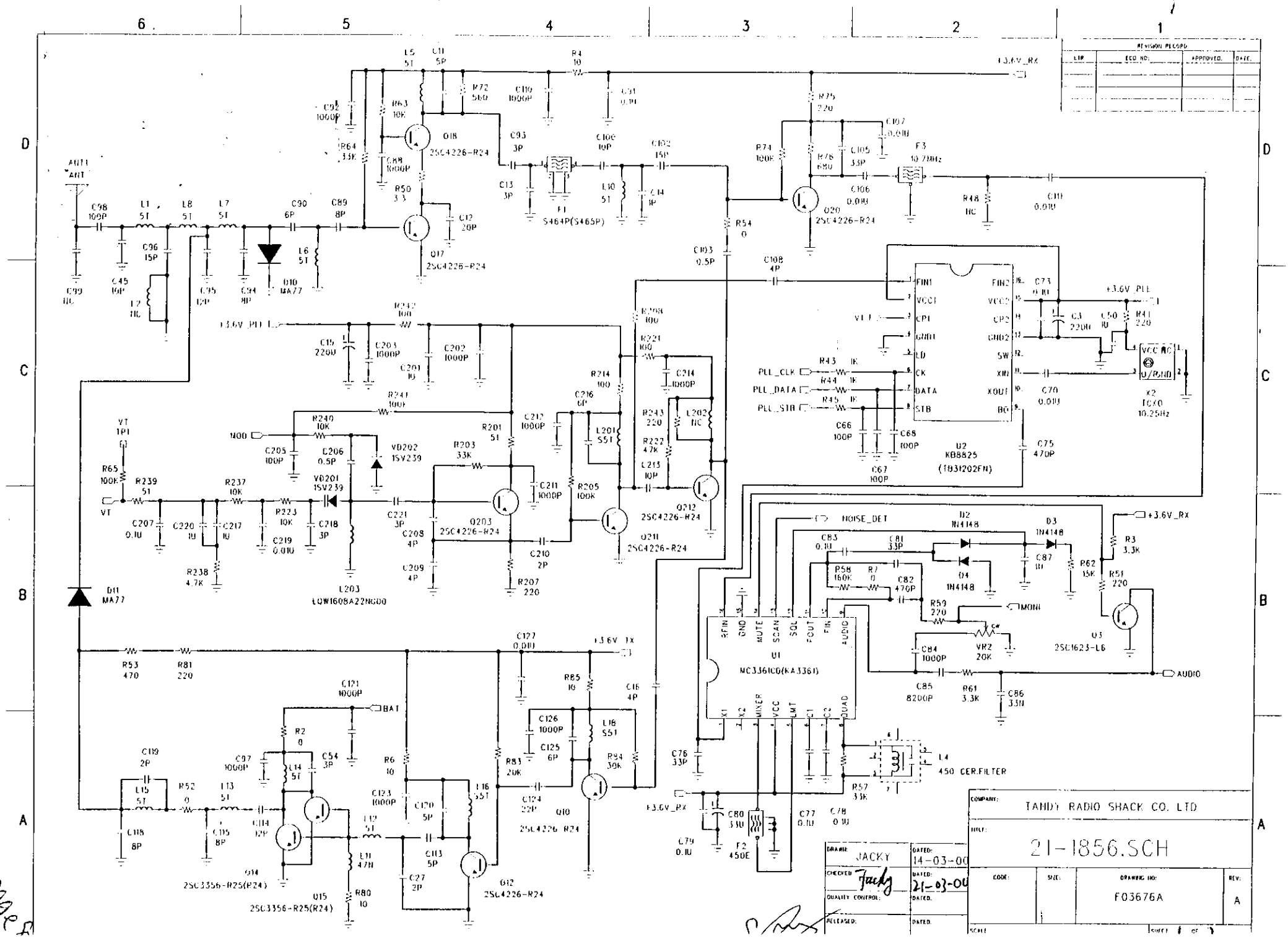
REVISION RECORD
LTR
ECO NO:
APPROVED:
DATE:
+3.6V_RX
+3.6V_PLL
+3.6V_TX
ANT1
ANT
VT
VT1
BAT
MON
AUDIO
NOISE_DET
PLL_CLK
PLL_DATA
PLL_STB
F1
S464P(S465P)
F2
450E
F3
10.7MHz
X2
TCXO
10.25MHz
U2
KB8825
(TB31202FN)
U1
MC3361CD(KA3361)
L4
450 CER.FILTER
Q18
2SC4226-R24
Q17
2SC4226-R24
Q20
2SC4226-R24
Q203
2SC4226-R24
Q211
2SC4226-R24
Q212
2SC4226-R24
Q10
2SC4226-R24
Q12
2SC4226-R24
Q14
2SC3356-R25(R24)
Q15
2SC3356-R25(R24)
Q3
2SC1623-L6
D10
MA77
D11
MA77
D2
1N4148
D3
1N4148
D4
1N4148
VD201
1SV239
VD202
1SV239
L203
LQW1608A22NG00
COMPANY:
TANDY RADIO SHACK CO. LTD
TITLE:
21-1856.SCH
DRAWING NO:
F03676A
REV:
A
DRAWN:
JACKY
CHECKED:
QUALITY CONTROL:
RELEASED:
DATE:
14-03-00
21-03-00

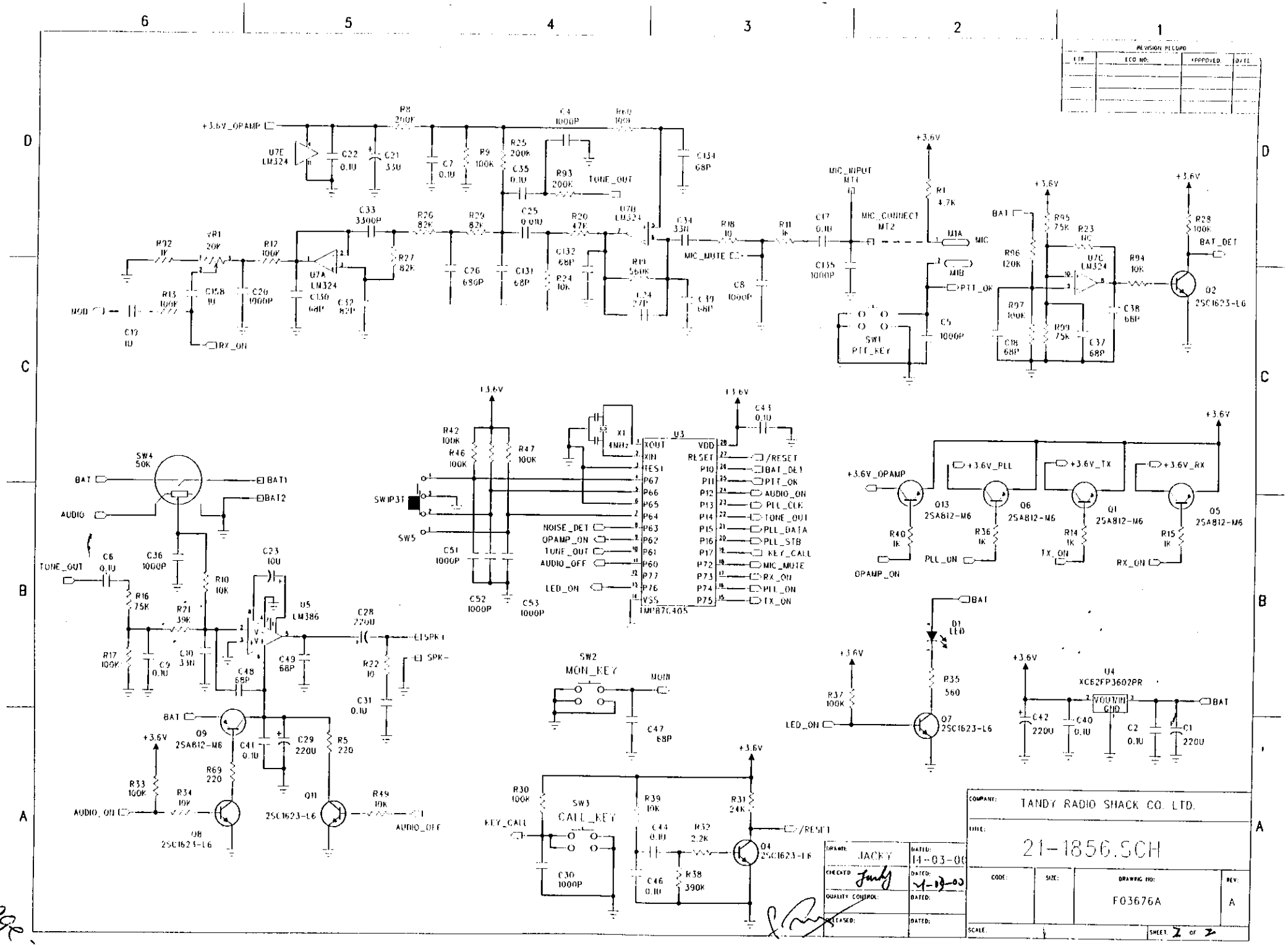
REVISION RECORD
ECO NO:
APPROVED
DATE
+3.6V_OPAMP
U7E LM324
C22 0.1U
C21 33U
R8 200K
C7 0.1U
R9 100K
R25 200K
C4 1000P
R6.0 100K
C35 0.1U
R93 200K
TONE_OUT
C134 68P
C33 3300P
R26 82K
R29 82K
C25 0.01U
R20 47K
U7D LM324
C34 33U
R18 10
R11 1K
C17 0.1U
MIC_INPUT
MT1
MIC_CONNECT
MT2
+3.6V
R1 4.7K
MIC
MIB
PTT_OK
C5 1000P
SW1 PTT_KEY
C135 1000P
R92 1K
VR1 20K
R12 100K
U7A LM324
R27 82K
C26 680P
C131 68P
C132 68P
R24 10K
R19 560K
C24 27P
C39 68P
C8 1000P
MIC_MUTE
R13 100K
C15.8 1U
C20 1000P
C130 68P
C32 82P
MOD
C19 1U
RX_ON
BAT
R95 75K
R23 NC
U7C LM324
R96 120K
R97 100K
R99 75K
C18 68P
C37 68P
C38 68P
R94 10K
R28 100K
BAT_DET
Q2 2SC1623-L6
SW4 50K
BAT1
BAT2
AUDIO
TONE_OUT
C6 0.1U
C36 1000P
R10 10K
R16 75K
R21 39K
R17 100K
C9 0.1U
C10 33U
C23 10U
U5 LM386
C48 68P
C49 68P
C28 220U
SPK+
SPK-
R22 10
C31 0.1U
R42 100K
R46 100K
R47 100K
SW1P3T
SW5
C51 1000P
C52 1000P
C53 1000P
X1 4MHz
U3
XOUT
XIN
TEST
P67
P66
P65
P64
P63
P62
P61
P60
P77
P76
VSS
VDD
RESET
P10
P11
P12
P13
P14
P15
P16
P17
P72
P73
P74
P75
TMP87C405
NOISE_DET
OPAMP_ON
TONE_OUT
AUDIO_OFF
LED_ON
C43 0.1U
/RESET
BAT_DET
PTT_OK
AUDIO_ON
PLL_CLK
TONE_OUT
PLL_DATA
PLL_STB
KEY_CALL
MIC_MUTE
RX_ON
PLL_ON
TX_ON
+3.6V_OPAMP
+3.6V_PLL
+3.6V_TX
+3.6V_RX
Q13 2SA812-M6
Q6 2SA812-M6
Q1 2SA812-M6
Q5 2SA812-M6
R40 1K
R36 1K
R14 1K
R15 1K
OPAMP_ON
PLL_ON
TX_ON
RX_ON
SW2 MON_KEY
MON
C47 68P
BAT
D1 LED
R35 560
Q7 2SC1623-L6
R37 100K
LED_ON
U4 XC62FP3602PR
VOUT/VIN
GND
C42 220U
C40 0.1U
C2 0.1U
C1 220U
Q9 2SA812-M6
C41 0.1U
C29 220U
R5 220
R69 220
R33 100K
R34 10K
AUDIO_ON
Q8 2SC1623-L6
Q11 2SC1623-L6
R49 10K
AUDIO_OFF
R30 100K
SW3 CALL_KEY
KEY_CALL
C30 1000P
R39 10K
C44 0.1U
R32 2.2K
C46 0.1U
R38 390K
R31 24K
Q4 2SC1623-L6
/RESET
COMPANY: TANDY RADIO SHACK CO. LTD.
TITLE: 21-1856.SCH
DRAWN: JACKY
DATED: 14-03-00
CHECKED
DATED: 14-03-00
QUALITY CONTROL:
DATED:
RELEASED:
DATED:
CODE:
SIZE:
DRAWING NO: F03676A
REV: A
SCALE:
SHEET 2 OF 2