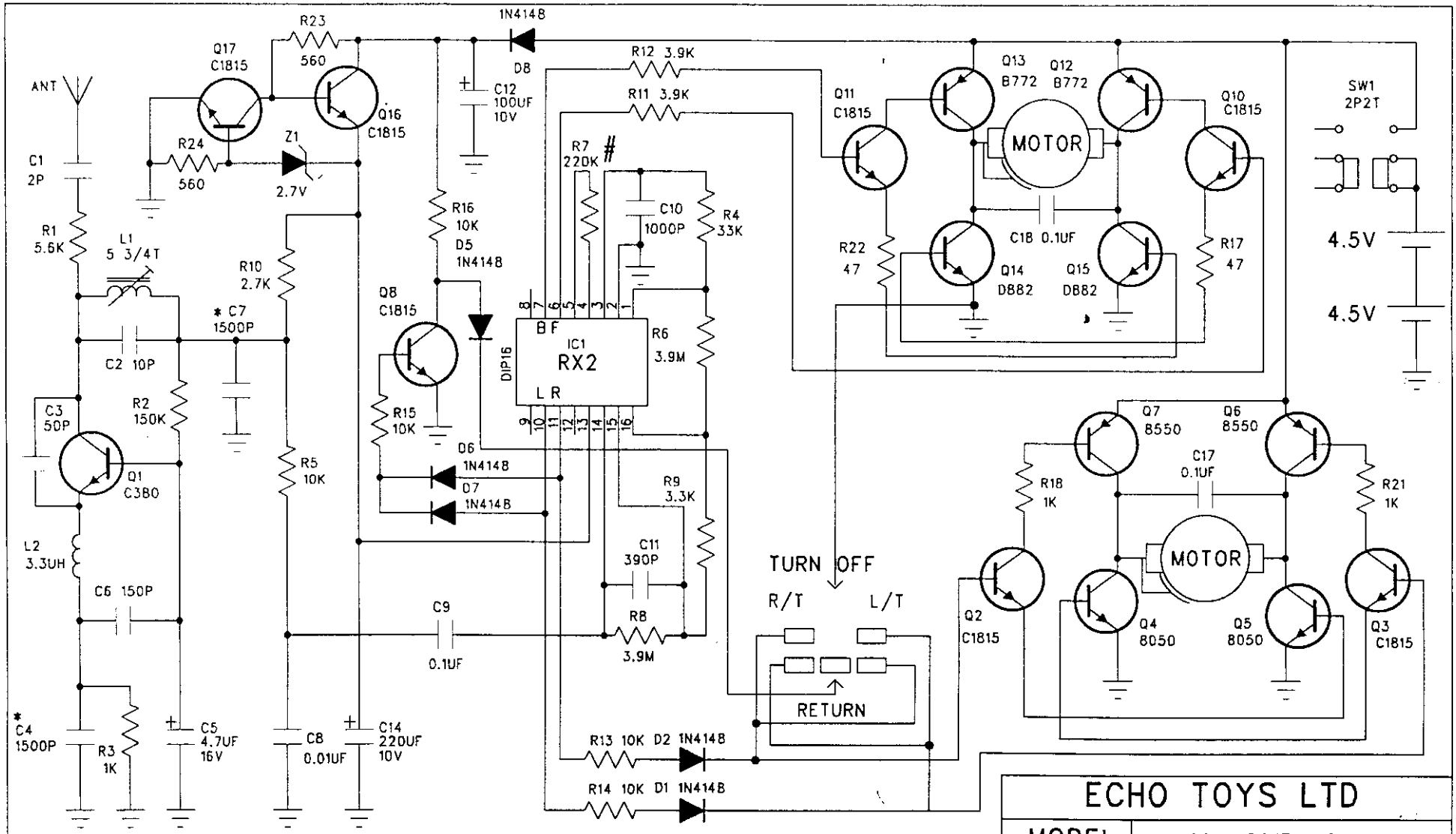

NOTE:ALL RESISTANCE VALUES ARE IN "ohm"
ALL CAPACITANCE VALUES ARE IN "UF"

* MYLAR

ECHO TOYS LTD	
MODEL	60-4201R-49
DWG NO	
DATE	23 MARCH 98
DESIGNER	