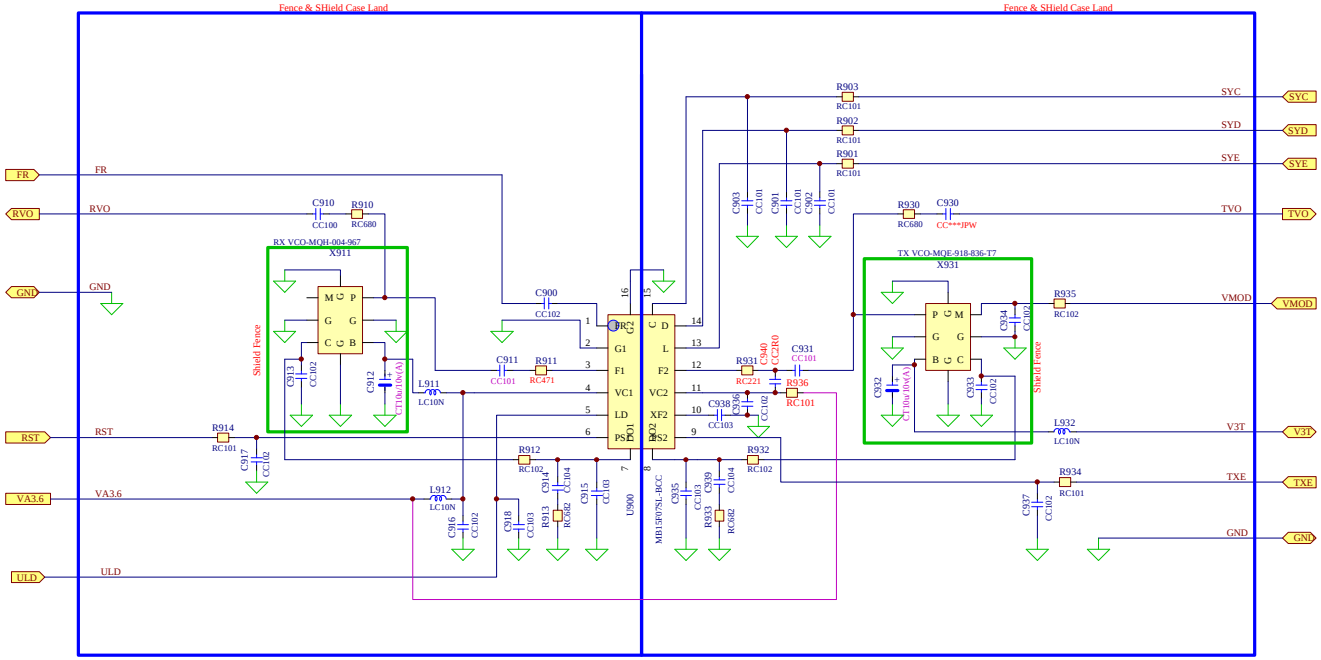

Title		
K3852(NSA1000) SYNTHESIZER SCHEMATIC		
Size	Number	Revision
A3	SYNTHESIZER MB75F	REV 1.4(Jan. 05.1999)
Date: 4-Apr-1999	Sheet 1 of 1	
File: D:\WeiFan\...\K3852SynthesizerSchematic.SCH	Drawn By: YK	