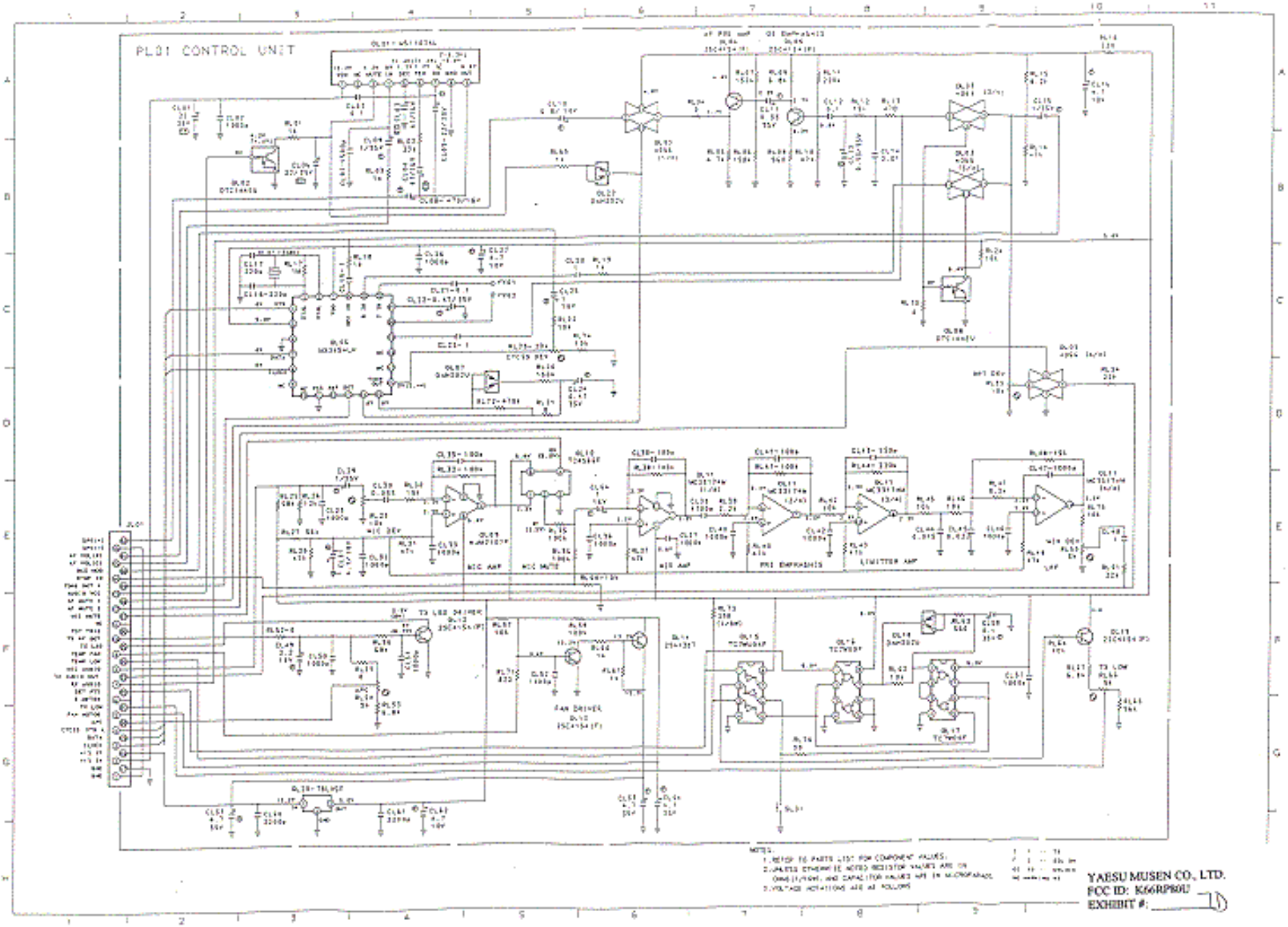

YAESU MUSEN CO., LTD.
FCC ID: K66RP80U
EXHIBIT #: 7D