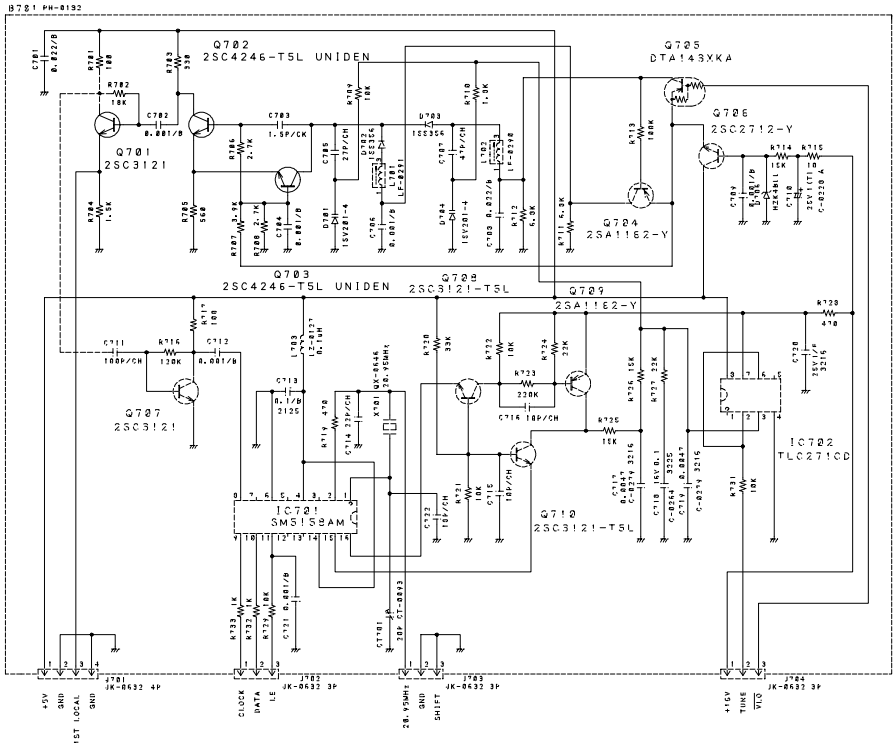

NOTES:

1. RESISTANCE VALUES ARE SHOWN IN OHMS UNLESS OTHERWISE NOTED. (K=KILO OHM, M=MEG OHM)
2. RESISTOR WATTAGES ARE (1/16W) UNLESS OTHERWISE NOTED.
3. CAPACITANCE VALUES ARE INDICATED IN MICRO FARADS UNLESS OTHERWISE NOTED. (P=MICRO-MICRO FARAD)
4. CHIP CAPACITOR'S SIZES ARE (1608) TYPE UNLESS OTHERWISE NOTED.
5. ALL CAPACITORS ARE RATED 50V UNLESS OTHERWISE NOTED.

DESIGN	DRAWN.BY	UNIDEN No.	MODEL No.
98.12.08	98.12.08	U8-2952	PRO-2849(28-419)
Y.TAKA	Y.TAKA	TITLE PLL ASS'Y SCHEMATIC DIAGRAM	
CHECK.BY	APPRO.BY		
		DRAWING No.	
REV.No		UNIDEN CORP.	