Main Circuit

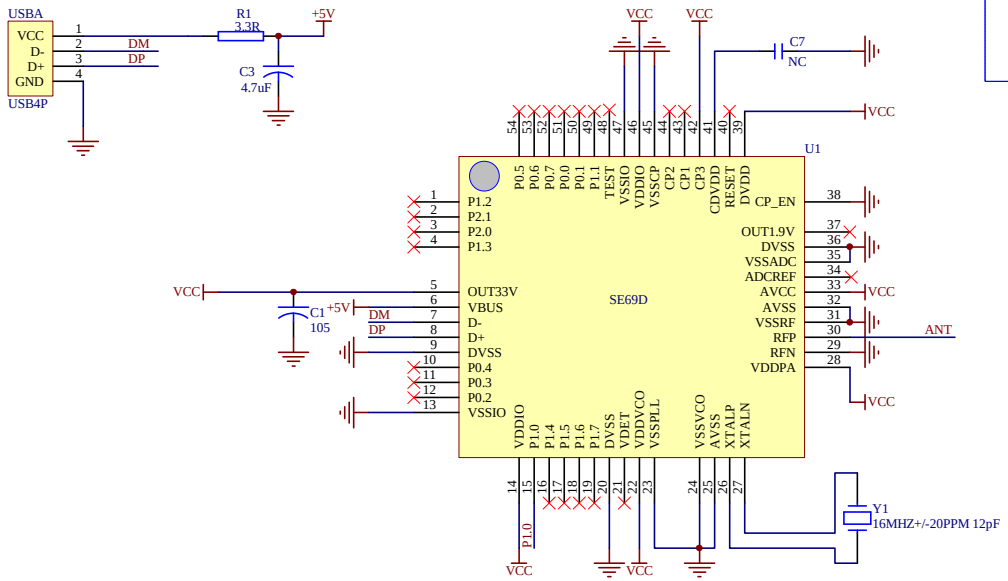

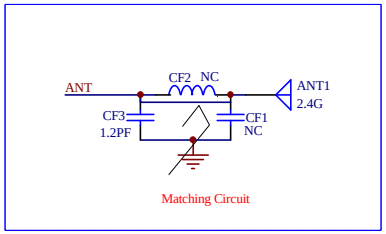

Created Date		2.4G Wireless Dongle Electrical Diagrams	
Created			Grade: A
Checked			
Standarded			
Approved			

08