REV	REVISION RECORD
A	RELEASE
B	CHANGE: 76.5 WAS 76.0 (D8), 56.1 (C6) WAS 56.0, ARTWORK, DIE LINE AND SUBSTRATE (NOTE 3)

100mm

BLACK = PROCESS BLACK INK
WHITE = WHITE INK
BLUE = DIE LINE

04AUG16 66-3018-052-000

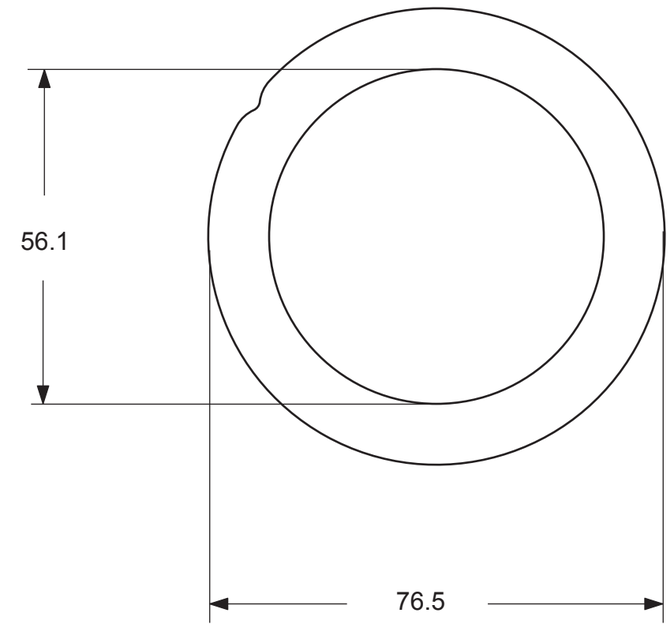

PART NUMBER	DESCRIPTION
66-3018-052-000	DECAL KILO BACK

Notes:
1. This graphic is silkscreen, die cut process.
2. Perform visual comparison of finished part against sample 66-3018-052-XXX and specification Grade 4 for first piece and in-process inspection.
3. Substrate is .020” velvet Lexan 8B35 with 3M 5mil F9469PC adhesive.
4. Art must be imageset on film, 800 dpi minimum.

GEOMETRIC DIMENSIONING AND TOLERANCING TO BE INTERPRETED PER ASME Y14.5-2009
DO NOT SCALE DRAWING
ALL DIMENSIONS ARE mm
UNSPECIFIED LENGTH TOLERANCE X.X +/- 0.5
UNSPECIFIED ANGLE TOLERANCE +/- 2degrees

DESIGNED BY: LORI CASTANUELA | FORMAT: A3 | SHEET: 1/1

SRAM®

CONFIDENTIAL - THIS DRAWING CONTAINS INFORMATION THAT IS PROPRIETARY TO SRAM CORPORATION AND MAY NOT BE DISCLOSED WITHOUT PERMISSION.

DRAWING NAME/DESCRIPTION: DECAL KILO BACK

DRAWING NUMBER: 66-3018-052-XXX

REVISION: B