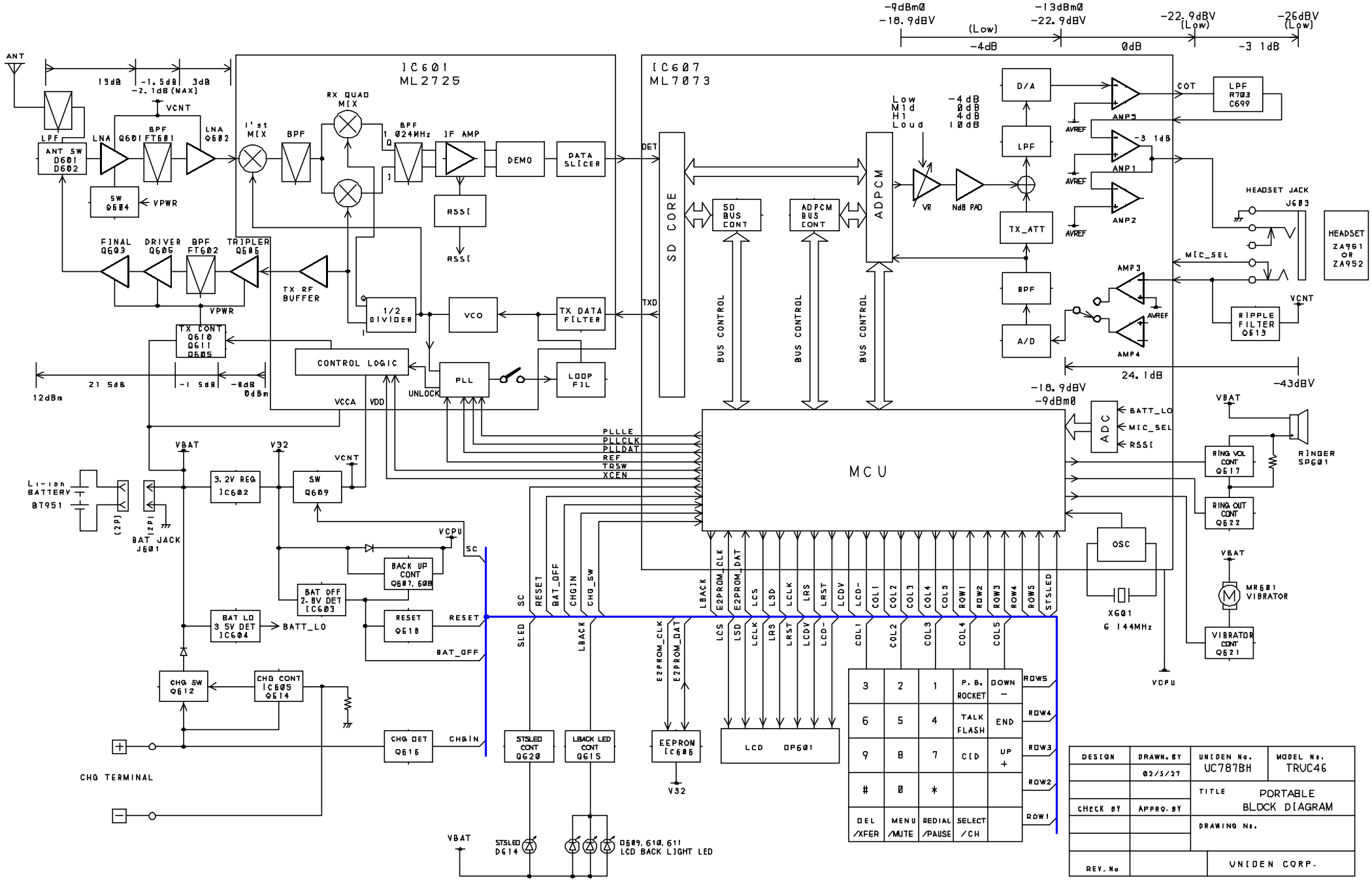
ANT
19dB
-1.5dB
3dB
-2.1dB (MAX)
VCNT
LPF
ANT SW D601 D602
LNA
BPF Q601 FT601
LNA Q602
SW Q604
VPWR
IC601 ML2725
1st MIX
BPF
RX QUAD MIX
BPF 1.024MHz
IF AMP
DEMO
DATA SLICER
RSSI
FINAL Q603
DRIVER Q605
BPF FT602
TRIPLER Q606
TX RF BUFFER
1/2 DIVIDER
VCO
TX DATA FILTER
TX CONT Q610 Q611 Q605
CONTROL LOGIC
PLL
LOOP FIL
UNLOCK
VCCA
VDD
21.5dB
-1.5dB
-8dB
12dBm
0dBm
IC607 ML7073
DET
TXD
SD CORE
SD BUS CONT
ADPCM BUS CONT
ADPCM
BUS CONTROL
BUS CONTROL
BUS CONTROL
Low
Mid
Hi
Loud
-4dB
0dB
4dB
10dB
VR
NdB PAD
D/A
LPF
TX_ATT
BPF
A/D
AVREF
AMP5
AMP1
AMP2
AMP3
AMP4
-3.1dB
COT
LPF R703 C699
HEADSET JACK J603
HEADSET ZA951 OR ZA952
MIC_SEL
RIPPLE FILTER Q613
VCNT
24.1dB
-43dBV
-9dBm0
-13dBm0
-22.9dBV
-26dBV
(Low)
-18.9dBV
-4dB
0dB
-3.1dB
-18.9dBV
-9dBm0
ADC
BATT_LO
MIC_SEL
RSSI
MCU
PLLLE
PLLCLK
PLLDAT
REF
TRSW
XCEN
VBAT
V32
VCNT
Li-ion BATTERY BT951
(2P)
BAT JACK J601
3.2V REG IC602
SW Q609
VCPU
SC
BACK UP CONT Q607, 608
BAT OFF 2.8V DET IC603
BAT LO 3.5V DET IC604
BATT_LO
RESET Q618
RESET
BAT_OFF
CHG SW Q612
CHG CONT IC605 Q614
CHG DET Q615
CHGIN
CHG TERMINAL
SC
RESET
BAT_OFF
CHG_SW
SLED
LBACK
STSLED CONT Q620
LBACK LED CONT Q615
STSLED D614
D609, 610, 611 LCD BACK LIGHT LED
E2PROM_CLK
E2PROM_DAT
EEPROM IC606
V32
LBACK
E2PROM_CLK
E2PROM_DAT
LCS
LSD
LCLK
LRS
LRST
LCDV
LCD-
COL1
COL2
COL3
COL4
COL5
ROW1
ROW2
ROW3
ROW4
ROW5
STSLED
LCD DP601
OSC
X601 6.144MHz
VCPU
VBAT
RINGER SP601
RING VOL CONT Q617
RING OUT CONT Q622
VBAT
MR601 VIBRATOR
VIBRATOR CONT Q621
3 2 1 P.B. ROCKET DOWN -
6 5 4 TALK FLASH END
9 8 7 CID UP +
0 *
DEL /XFER MENU /MUTE REDIAL /PAUSE SELECT /CH
DESIGN
DRAWN. BY
02/5/27
UNIDEN No.
UC787BH
MODEL No.
TRUC46
CHECK BY
APPRO. BY
TITLE
PORTABLE BLOCK DIAGRAM
DRAWING No.
REV. No
UNIDEN CORP.