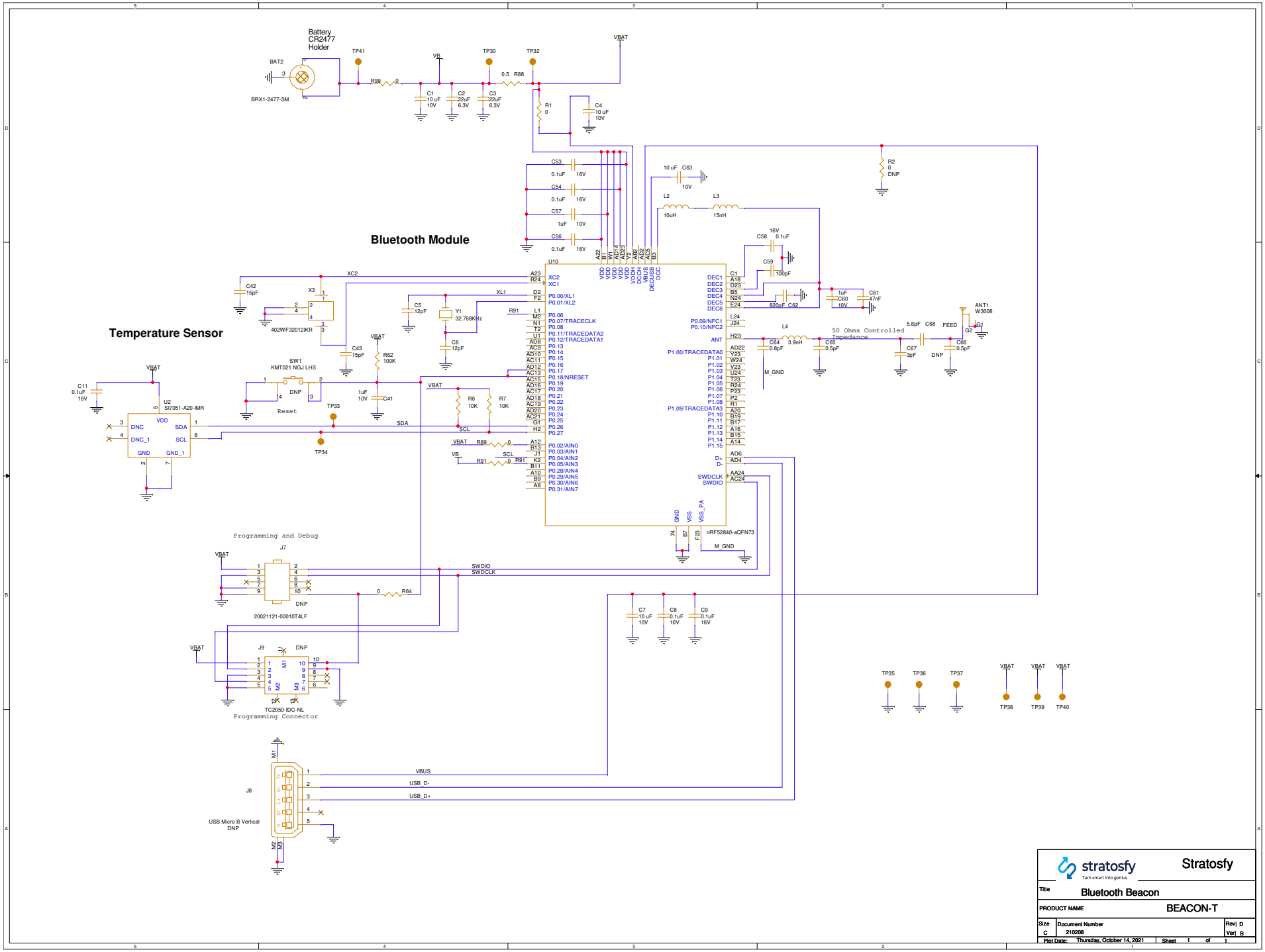

stratosfy
Turn smart into genius

Stratosfy

Title	Bluetooth Beacon
PRODUCT NAME	BEACON-T
Size C	Document Number 210208
Rev| D	Ver| B
Plot Date: Thursday, October 14, 2021	Sheet 1 of 1