DWG NO. 828-8772-002 SH 1

REVISIONS

LTR	DESCRIPTION	DATE	APVD
A	RL4443	05/10/01	H.S.
B	RM0903	07/03/01	H.S.

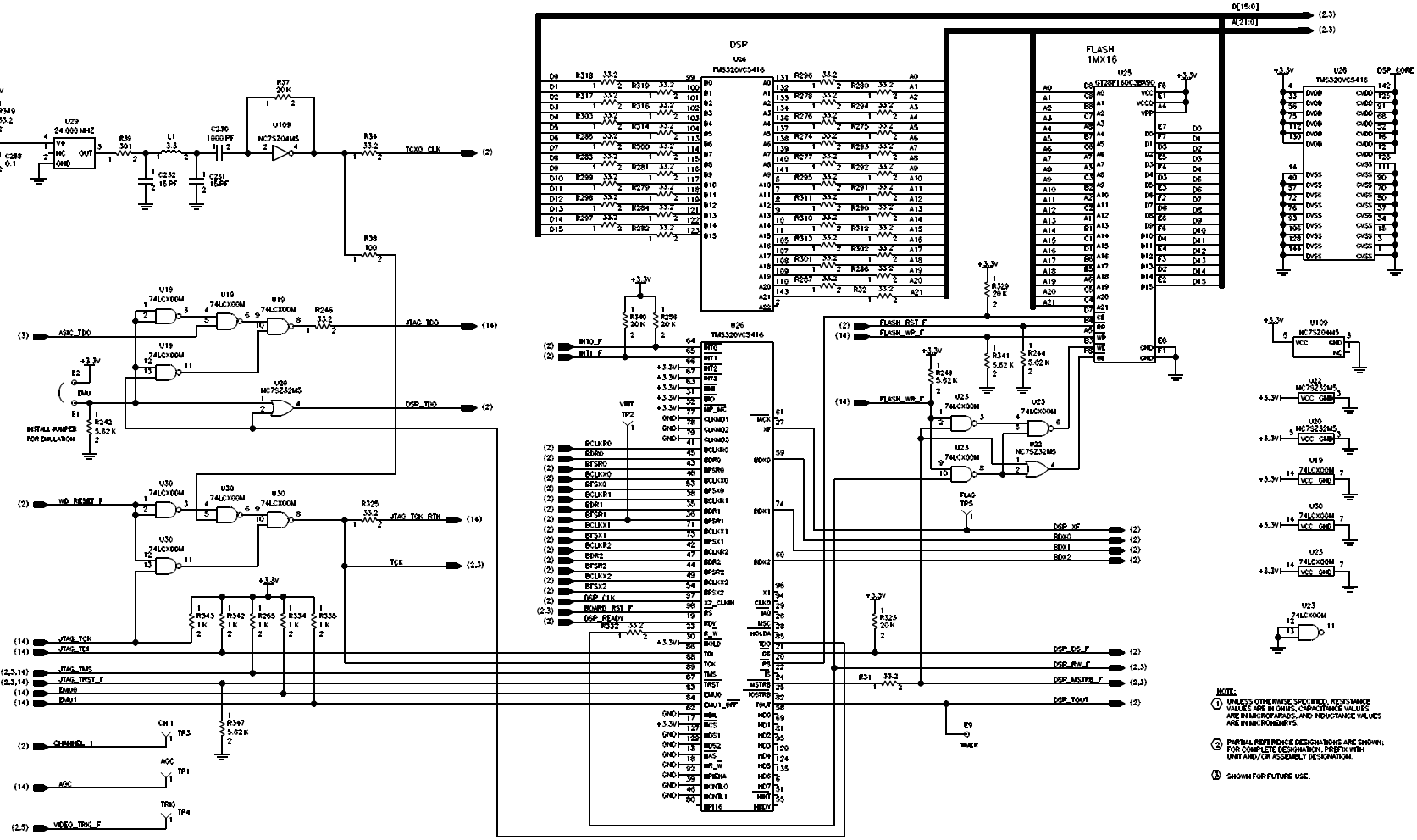

NOTE:

1. UNLESS OTHERWISE SPECIFIED, RESISTANCE VALUES ARE IN OHMS, CAPACITANCE VALUES ARE IN MICROFARADS, AND INDUCTANCE VALUES ARE IN MICROHENRYS.
2. PARTIAL REFERENCE DESIGNATIONS ARE SHOWN; FOR COMPLETE DESIGNATION, PREFIX WITH UNIT AND/OR ASSEMBLY DESIGNATION.
3. SHOWN FOR FUTURE USE.

THIS DRAWING IS CREATED FROM DIGITAL DATA

ROCKWELL COLLINS PROPRIETARY INFORMATION.

PREP	Rodney G Love
CHK	Richard A. Scalise
ENG APVD	N. Sarpoolaki
NEXT ASSY PART NO.	828-3372-002
EQUIPMENT TYPE NO.	DME-4000

ROCKWELL COLLINS, INC
400 COLLINS RD. NE CEDAR RAPIDS, IA 52498

SCHEMATIC DIAGRAM, DSP/POWER SUPPLY

SIZE	CAGE CODE	DWG NO.	REV LTR
D	4V792	828-8772-002	B
SCALE	NONE	SHEET 1 OF 14	

design.1

Plotted 07/31/01 08:42

DIGITAL DATA ONLY NO MASTER TRACING

NEXT ☐ REL ☒ CR 2 MB 0

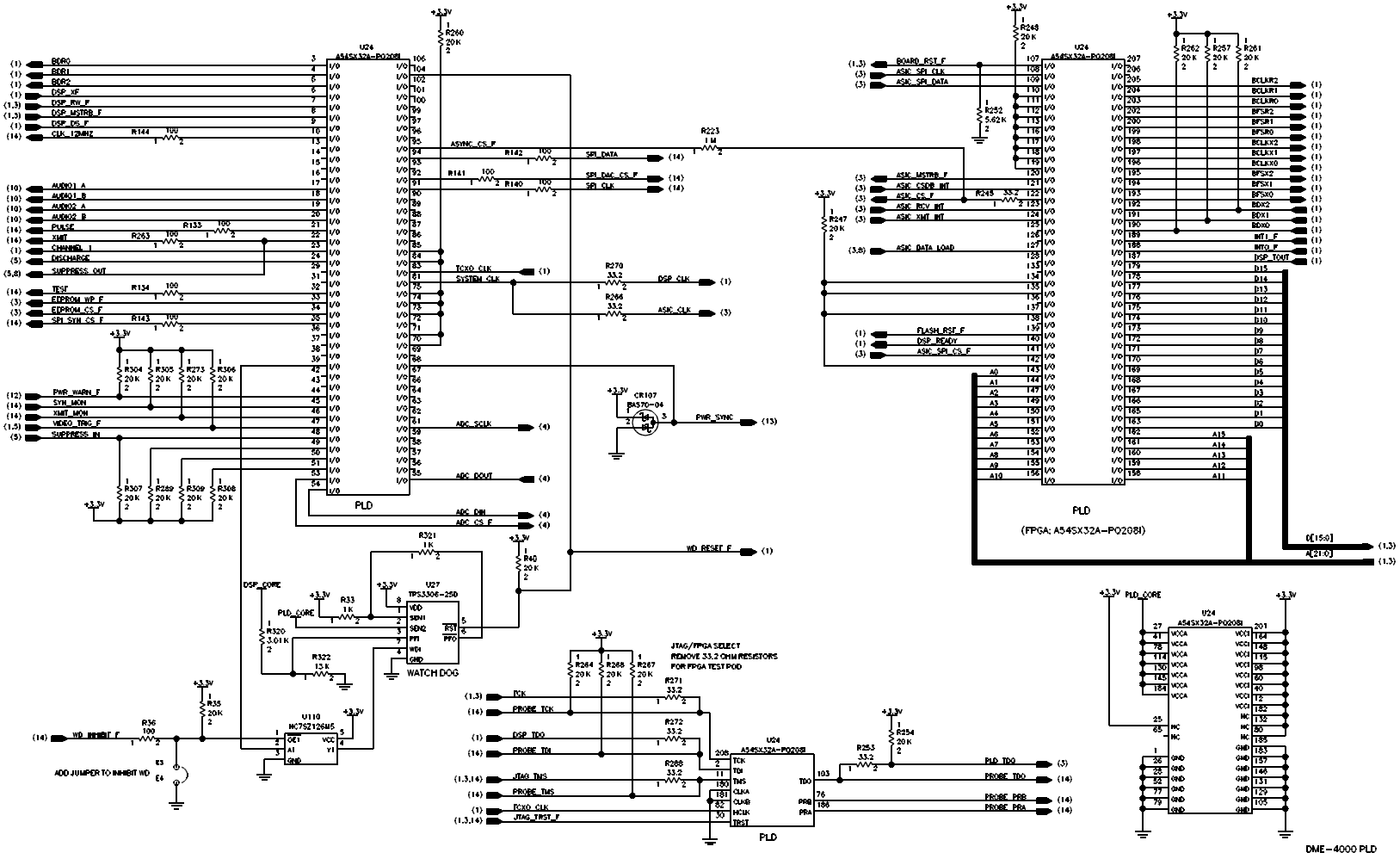

THIS DRAWING IS CREATED FROM DIGITAL DATA

ROCKWELL COLLINS
PROPRIETARY INFORMATION.

SIZE	CAGE CODE	DWG NO.	REV LTR
D	4V792	828-8772-002	B
SCALE NONE		SHEET 2	

design 2

Plotted 07/31/01 08:42

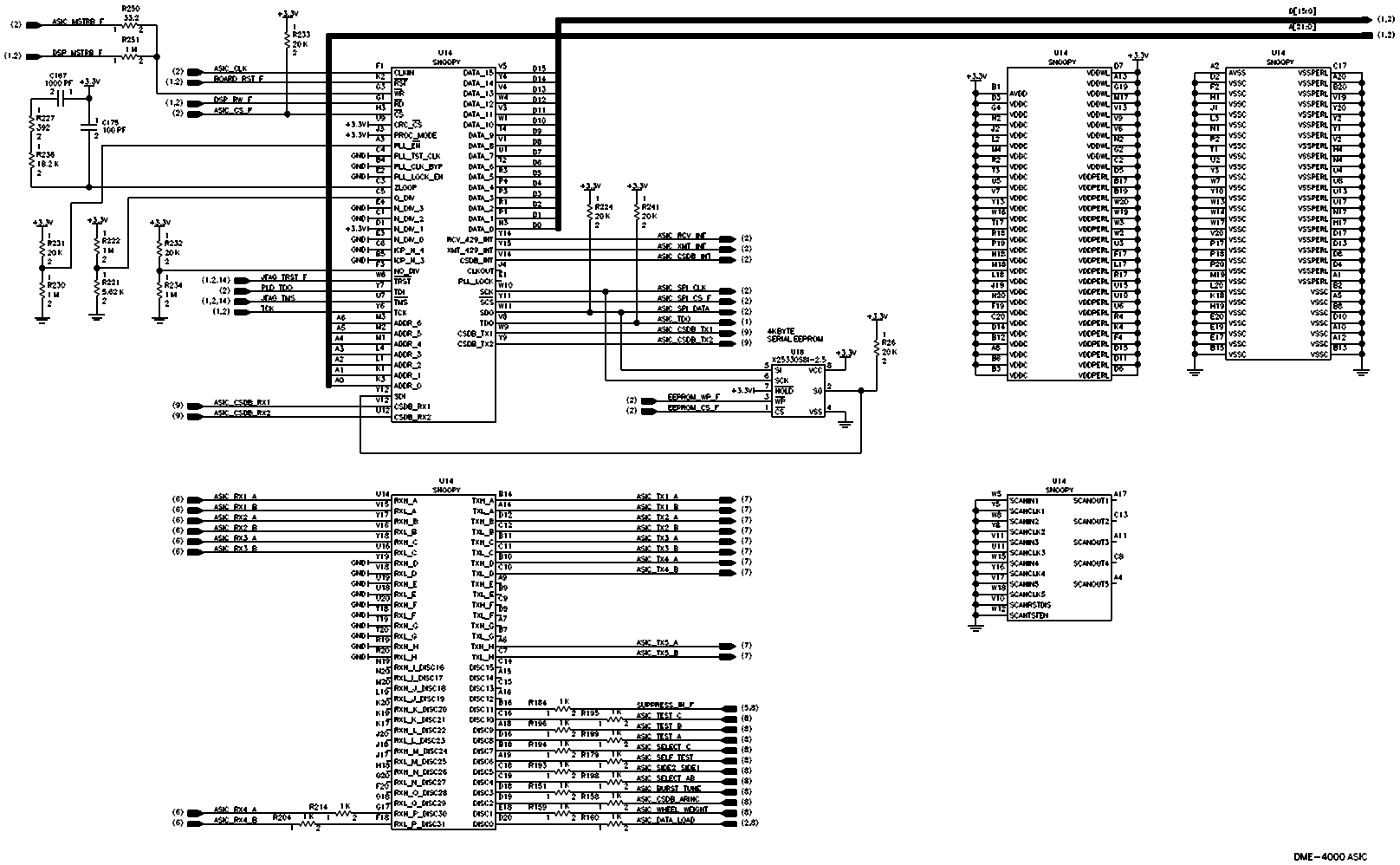

THIS DRAWING IS CREATED FROM DIGITAL DATA

ROCKWELL COLLINS
PROPRIETARY INFORMATION.

SIZE	CAGE CODE	DWG NO.	REV LTR
D	4V792	828-8772-002	B
SCALE NONE		SHEET 3	

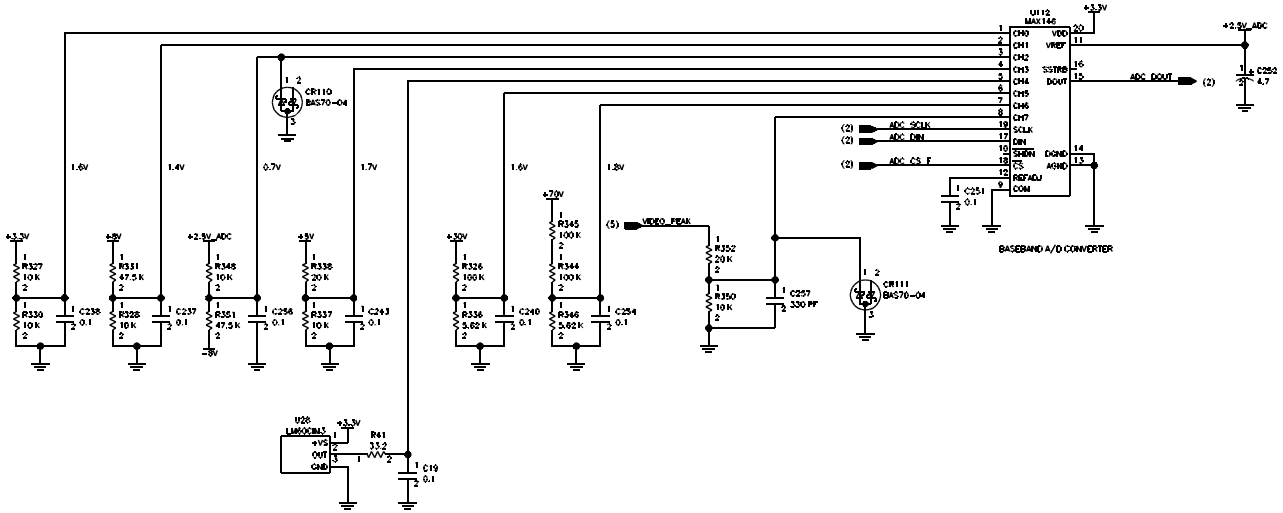

DME-4000 ANALOG CONTROL

THIS DRAWING IS CREATED FROM DIGITAL DATA

ROCKWELL COLLINS
PROPRIETARY INFORMATION.

SIZE	CAGE CODE	DWG NO.	REV LTR
D	4V792	828-8772-002	B
SCALE NONE		SHEET 4	

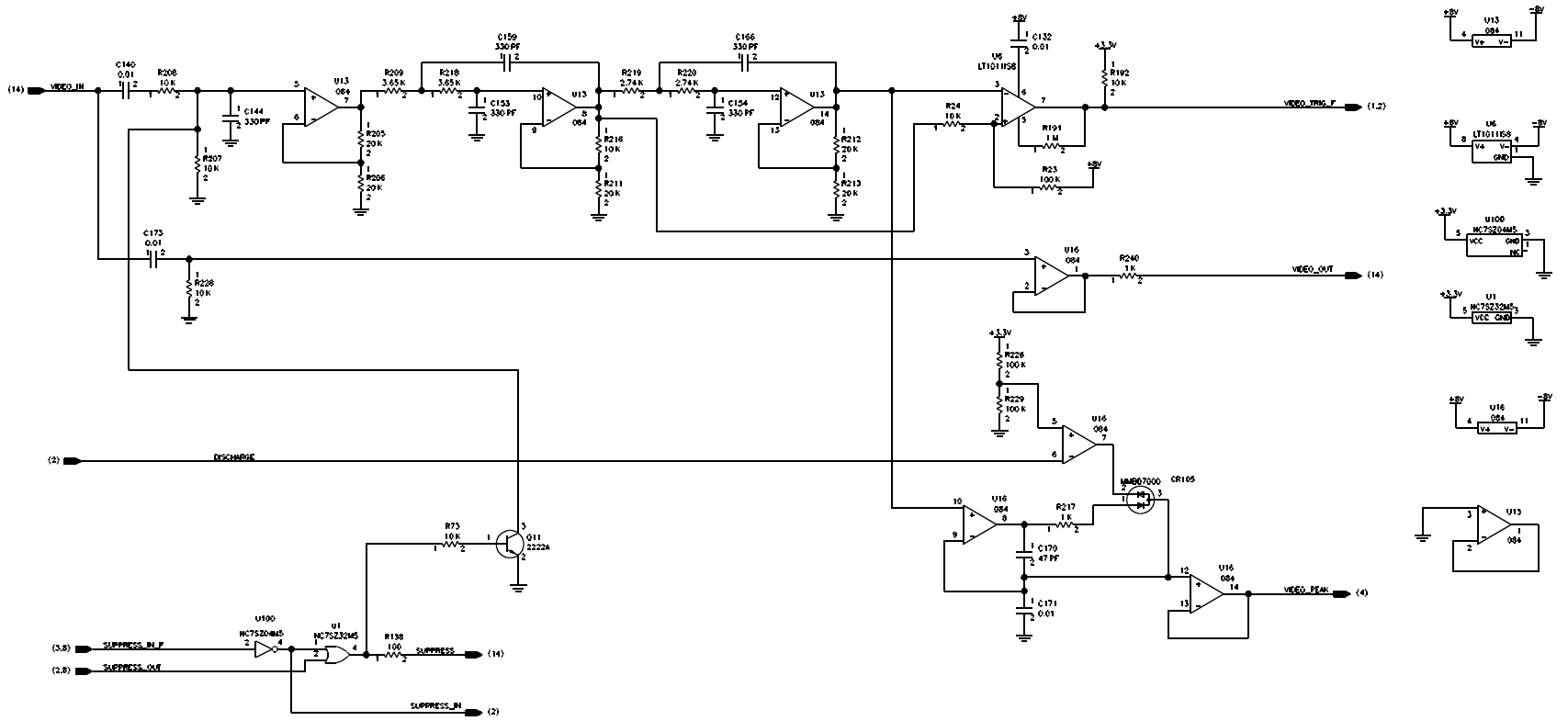

DME-4000 RANGE PROCESSOR

THIS DRAWING IS CREATED FROM DIGITAL DATA

ROCKWELL COLLINS
PROPRIETARY INFORMATION.

SIZE	CAGE CODE	DWG NO.	REV LTR
D	4V792	828-8772-002	B
SCALE NONE		SHEET 5	

NOTE: INPUT RESISTORS ARE RATED 200V

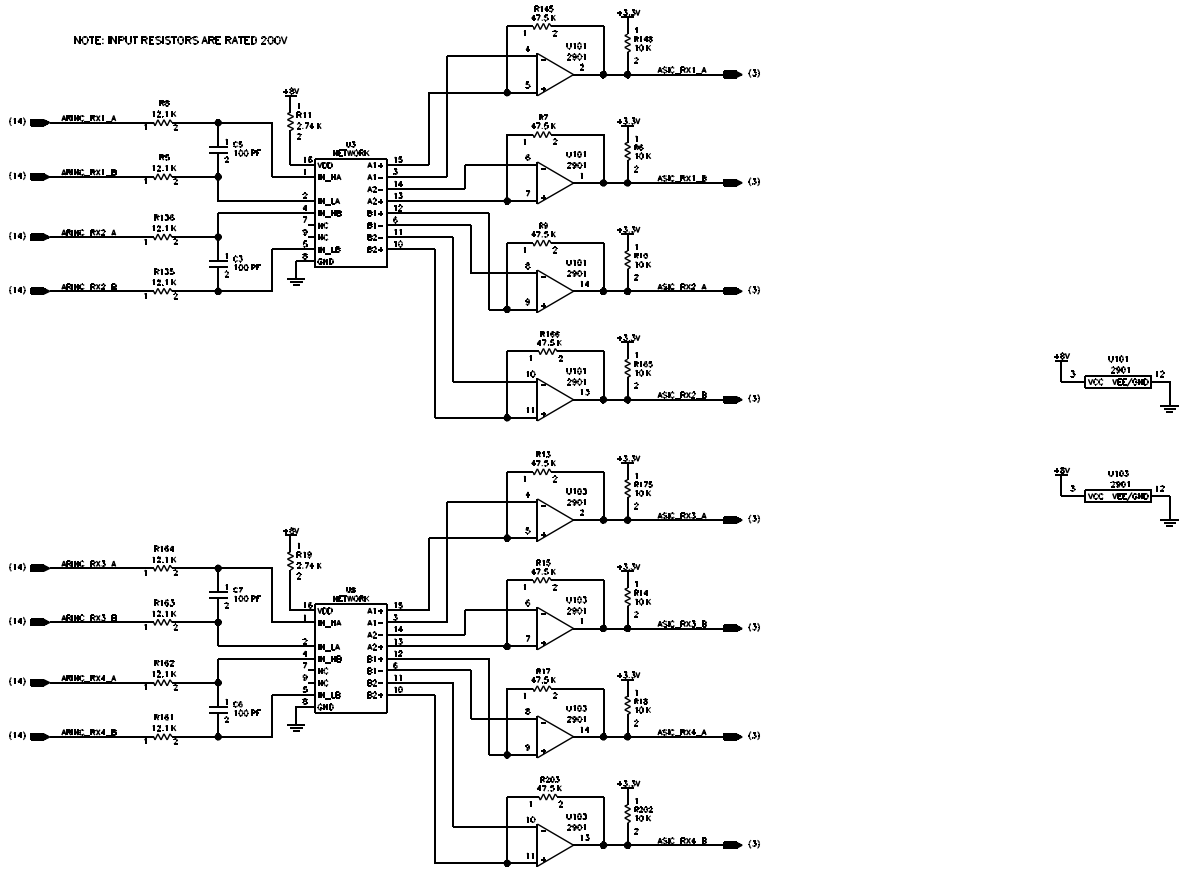

DME-4000 ARINC RECEIVERS

THIS DRAWING IS CREATED FROM DIGITAL DATA

ROCKWELL COLLINS
PROPRIETARY INFORMATION.

SIZE	CAGE CODE	DWG NO.	REV LTR
D	4V792	828-8772-002	B
SCALE NONE		SHEET 6	

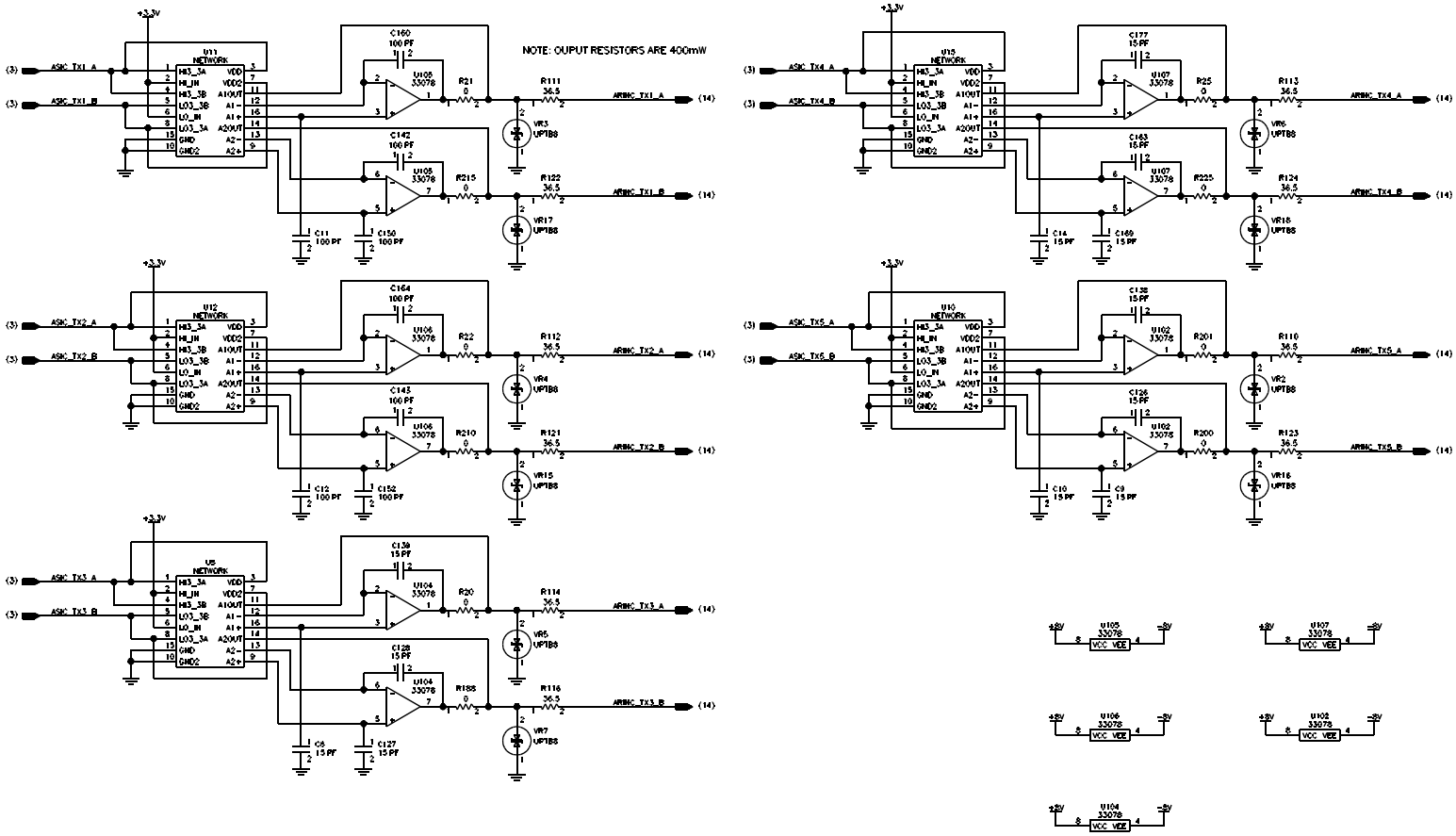

DME-4000 ARINC TRANSMITTERS

THIS DRAWING IS CREATED FROM DIGITAL DATA

ROCKWELL COLLINS
PROPRIETARY INFORMATION.

SIZE	CAGE CODE	DWG NO.	REV LTR
D	4V792	828-8772-002	B
SCALE NONE		SHEET 7	

NOTE: INPUT RESISTORS ARE RATED 200V

NOTE: SERIES DIODES ARE RATED 300V PIV

NOTE: FILTER CAPACITORS ARE RATED 100WVDC

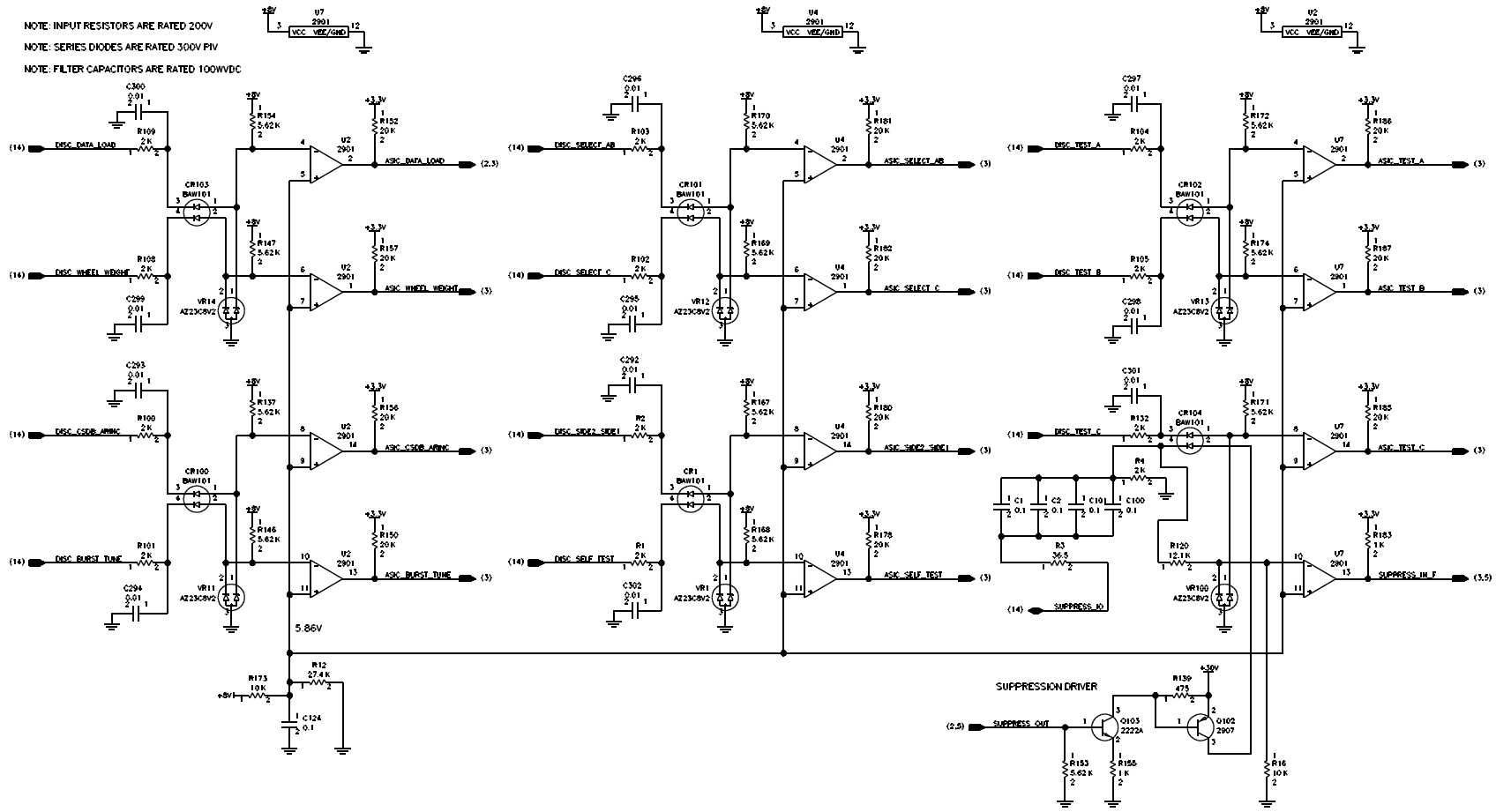

DME-4000 DISCRETE INPUTS

THIS DRAWING IS CREATED FROM DIGITAL DATA

ROCKWELL COLLINS PROPRIETARY INFORMATION.

SIZE	CAGE CODE	DWG NO.	REV LTR
D	4V792	828-8772-002	B
SCALE NONE		SHEET 8	

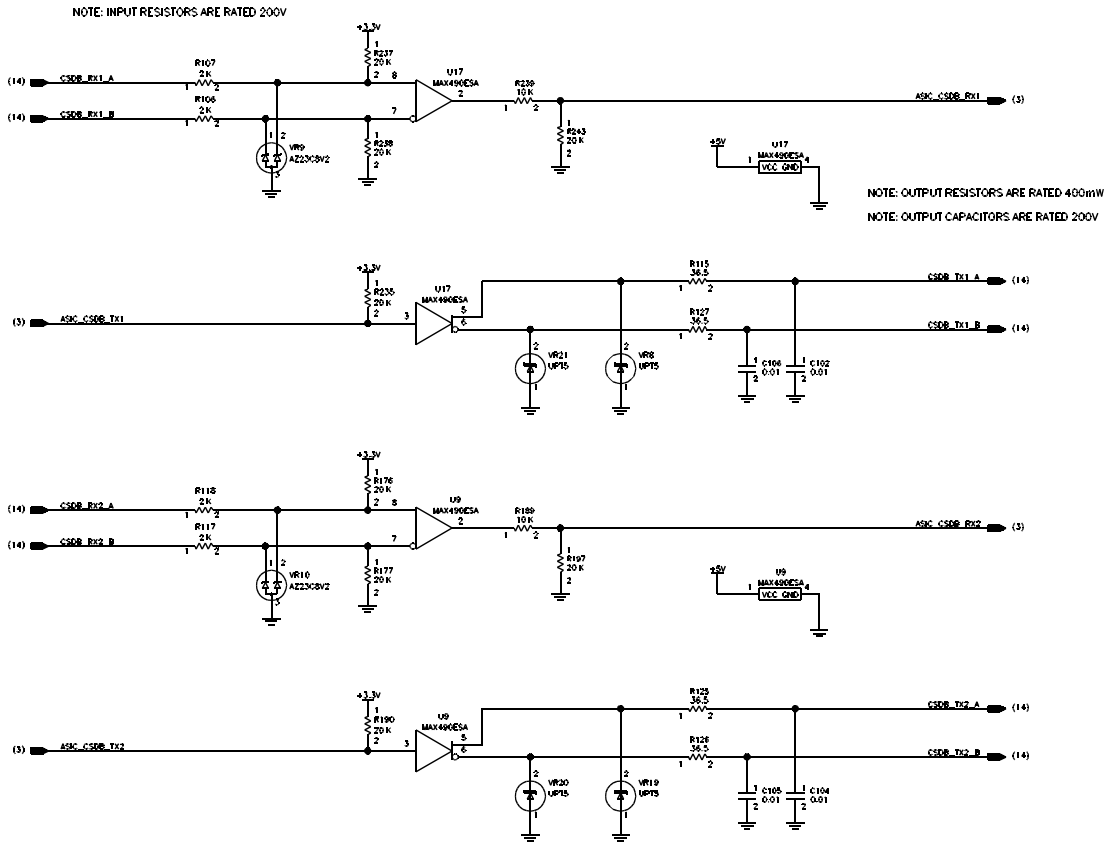

DME-4000 CSDB TRANSCEIVERS

THIS DRAWING IS CREATED FROM DIGITAL DATA

ROCKWELL COLLINS
PROPRIETARY INFORMATION.

SIZE	CAGE CODE	DWG NO.	REV LTR
D	4V792	828-8772-002	B
SCALE NONE		SHEET 9	

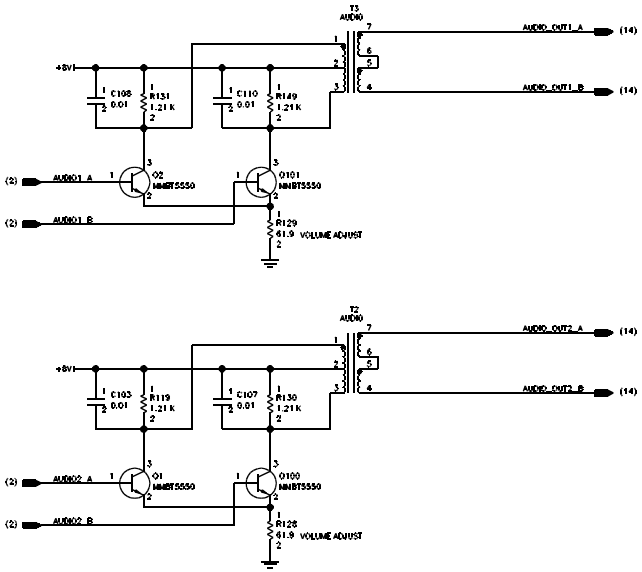

50mW
AUDIO AMP

DME-4000 AUDIO AMPLIFIERS

THIS DRAWING IS CREATED FROM DIGITAL DATA

ROCKWELL COLLINS
PROPRIETARY INFORMATION.

SIZE	CAGE CODE	DWG NO.	REV LTR
D	4V792	828-8772-002	B
SCALE NONE		SHEET 10	

DECOUPLING CAPACITORS ARE DISTRIBUTED ON BOTTOM OF BOARD

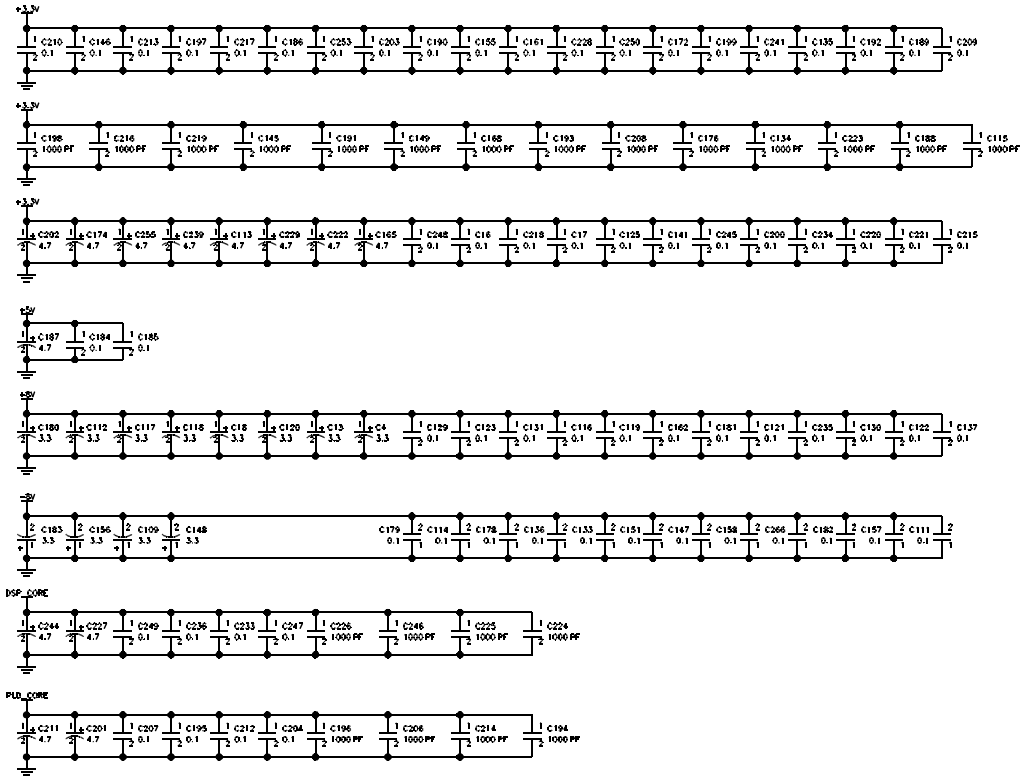

Note: ZERO OHM ELEMENTS ARE REQUIRED FOR STABILITY.

+5V POWER REGULATOR

TAB ATTACHED TO BOTTOM SIDE COPPER 1.0 SQ IN MIN TOPSIDE

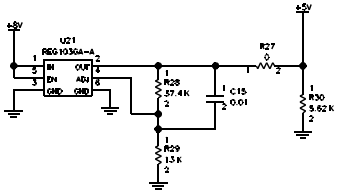

DSP CORE POWER REGULATOR

TAB ATTACHED TO BOTTOM SIDE COPPER 0.5 SQ IN MIN BOTSIDE

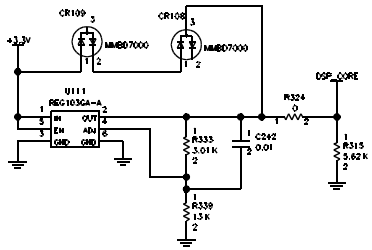

PLD CORE POWER REGULATOR

TAB ATTACHED TO BOTTOM SIDE COPPER 0.5 SQ IN MIN BOTSIDE

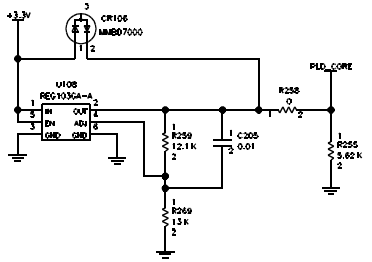

DME-4000 TERMINATION & DECOUPLING

THIS DRAWING IS CREATED FROM DIGITAL DATA

ROCKWELL COLLINS PROPRIETARY INFORMATION.

SIZE	CAGE CODE	DWG NO.	REV LTR
D	4V792	828-8772-002	B
SCALE NONE		SHEET 11	

DME 4000 POWER SUPPLY

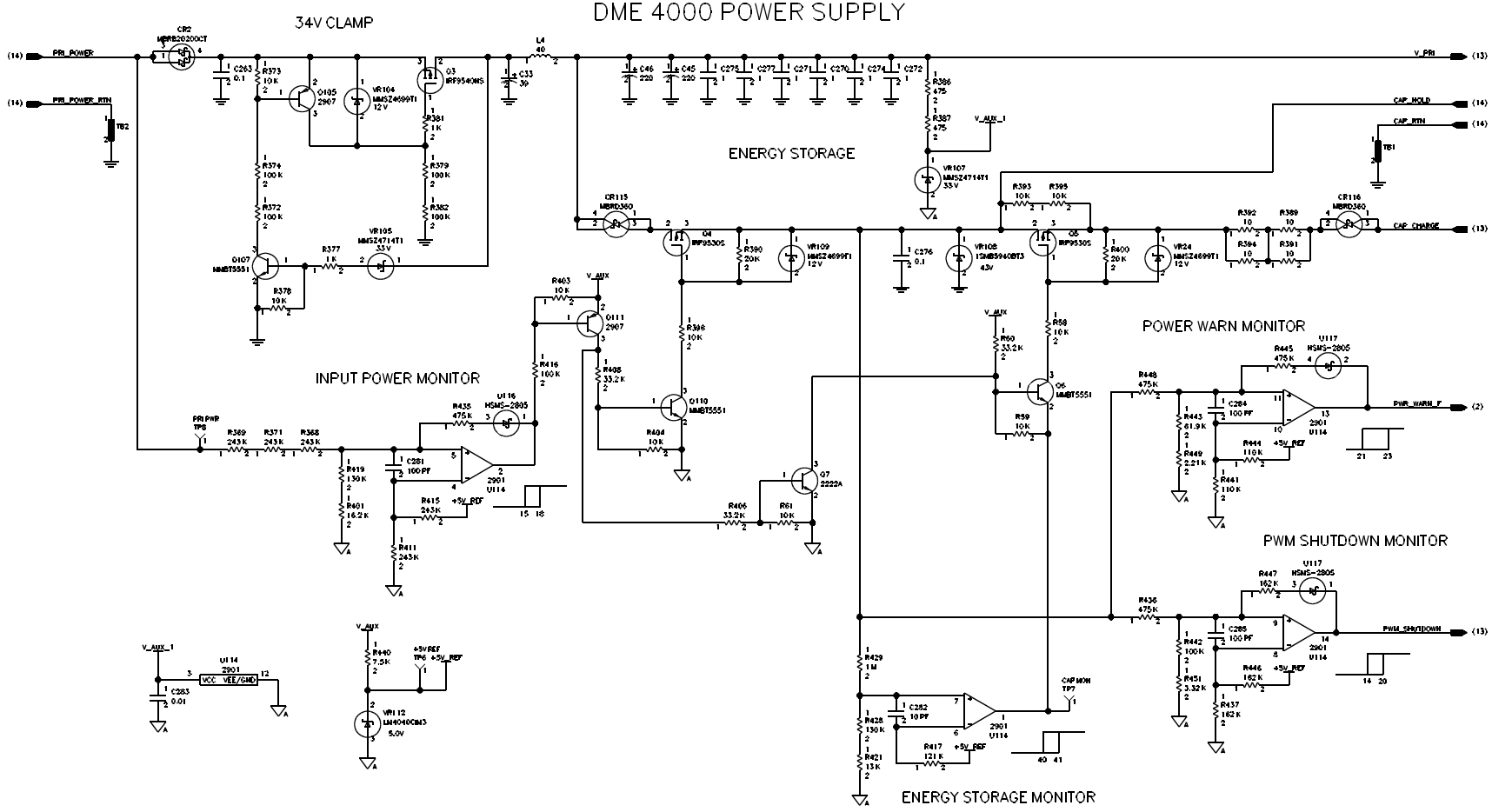

THIS DRAWING IS CREATED FROM DIGITAL DATA

ROCKWELL COLLINS PROPRIETARY INFORMATION.

SIZE	CAGE CODE	DWG NO.	REV/LTR
D	4V792	828-8772-002	B
SCALE NONE		SHEET 12	

design. 12 Plotted 07/31/01 08:42

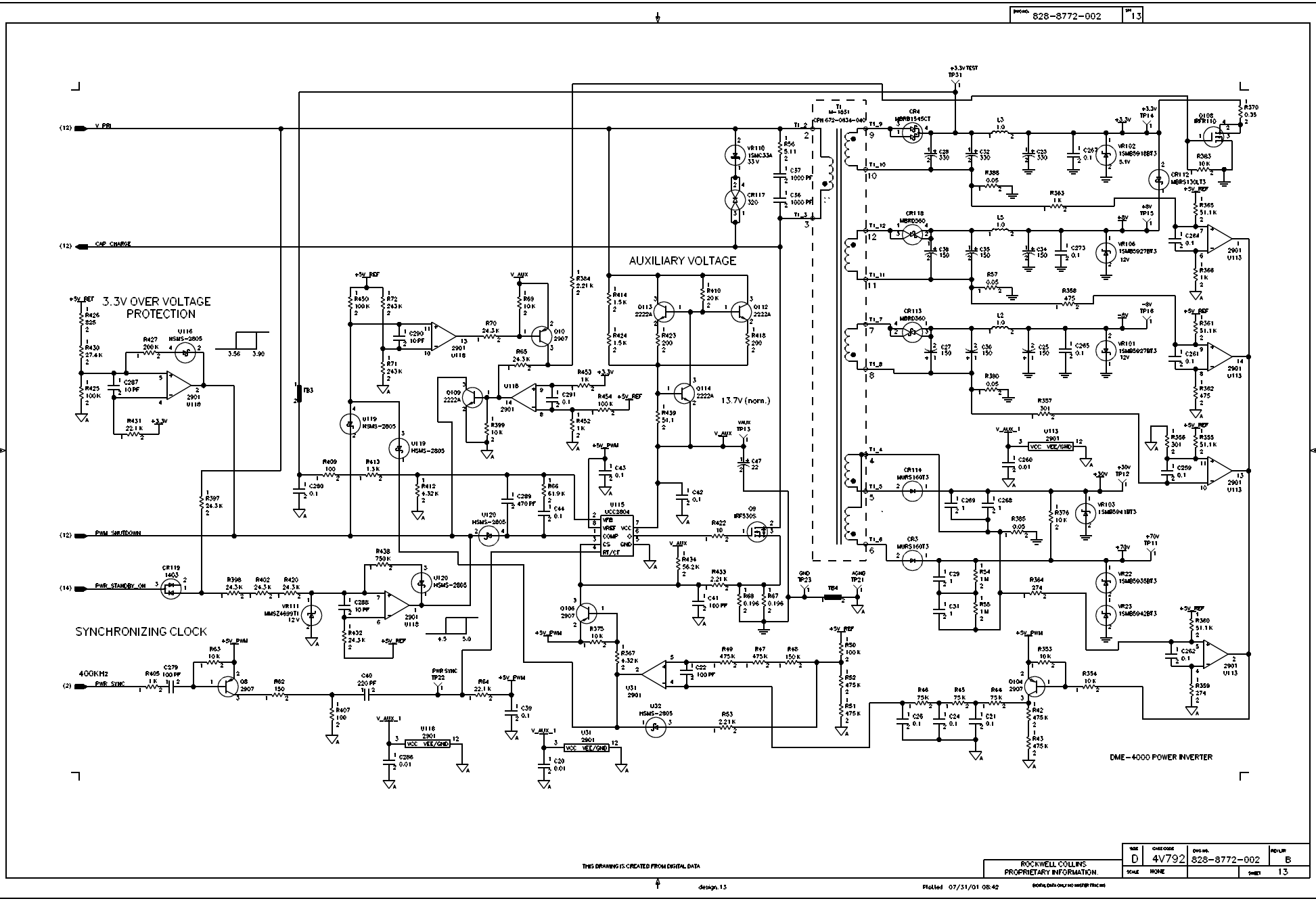
828-8772-002
13
V_PRI
CAP_CHARGE
PWM_SHUTDOWN
PWR_STANDBY_ON
PWR_SYNC
400KHz
3.3V OVER VOLTAGE PROTECTION
SYNCHRONIZING CLOCK
AUXILIARY VOLTAGE
13.7V (norm.)
DME-4000 POWER INVERTER
THIS DRAWING IS CREATED FROM DIGITAL DATA
ROCKWELL COLLINS PROPRIETARY INFORMATION.
D
4V792
828-8772-002
B
NONE
13
design. 13
Plotted 07/31/01 08:42

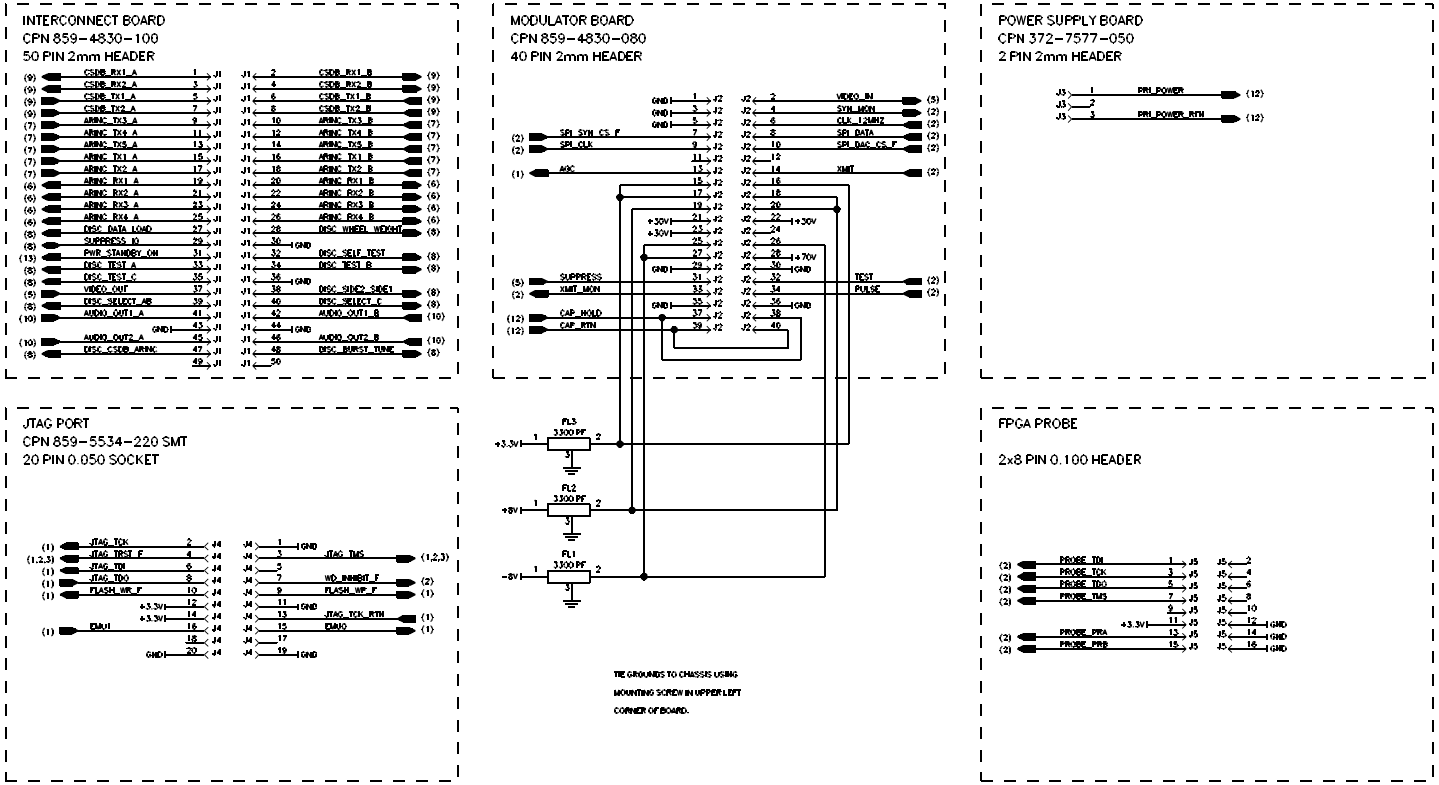

DME-4000 CONNECTORS