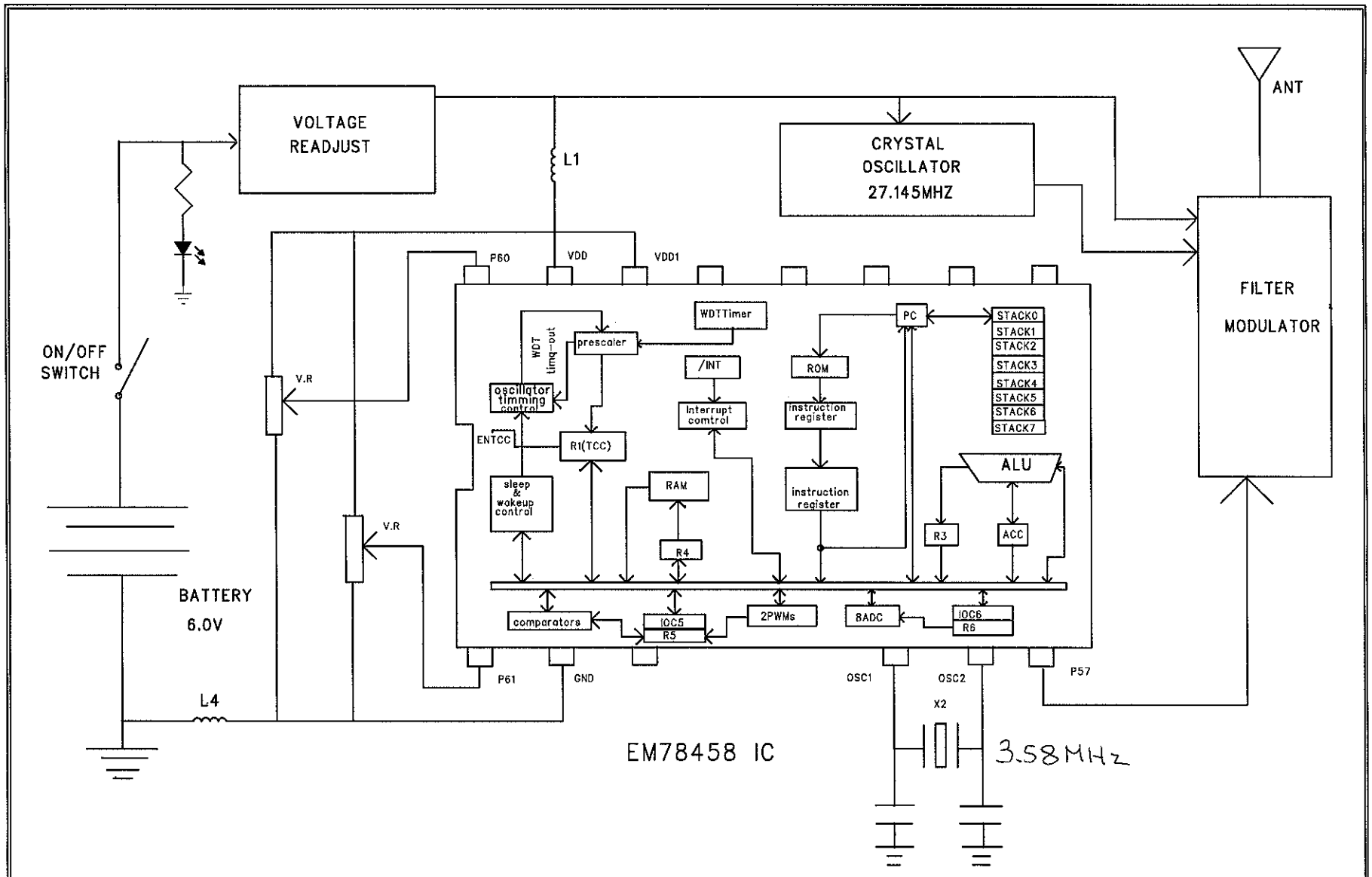

LUNG CHEONG	TITLE:	G3451 TX BLOCK DIGRAM	DESIGN BY:	DRAWING BY:	APPROVED BY:	SHEET:
	FUNCTION:			QW SHI		1 of 1
	DWG NO:	DZ02-0G3451-05		18-01-2005		