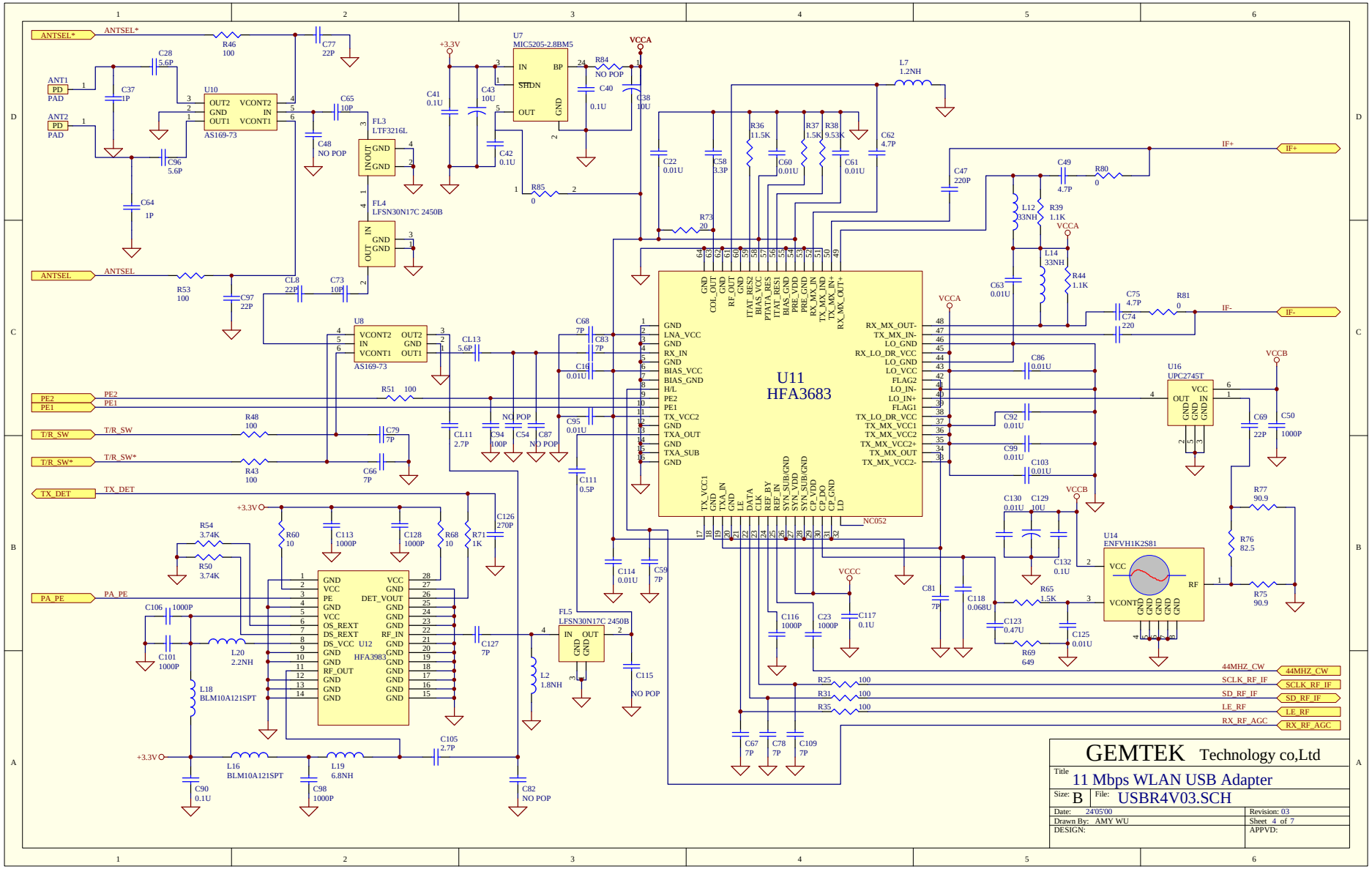
U11
HFA3683
U10
AS169-73
U8
AS169-73
U7
MIC5205-2.8BM5
U12
HFA3983
U16
UPC2745T
U14
ENFVH1K2S81
FL3
LTF3216L
FL4
LFSN30N17C 2450B
FL5
LFSN30N17C 2450B
ANTSEL*
ANTSEL
ANT1
ANT2
PE2
PE1
T/R_SW
T/R_SW*
TX_DET
PA_PE
IF+
IF-
VCCA
VCCB
VCCC
+3.3V
44MHZ_CW
SCLK_RF_IF
SD_RF_IF
LE_RF
RX_RF_AGC
GEMTEK Technology co,Ltd
Title
11 Mbps WLAN USB Adapter
Size: B
File: USBR4V03.SCH
Date: 24'05'00
Revision: 03
Drawn By: AMY WU
Sheet 4 of 7
DESIGN:
APPVD: