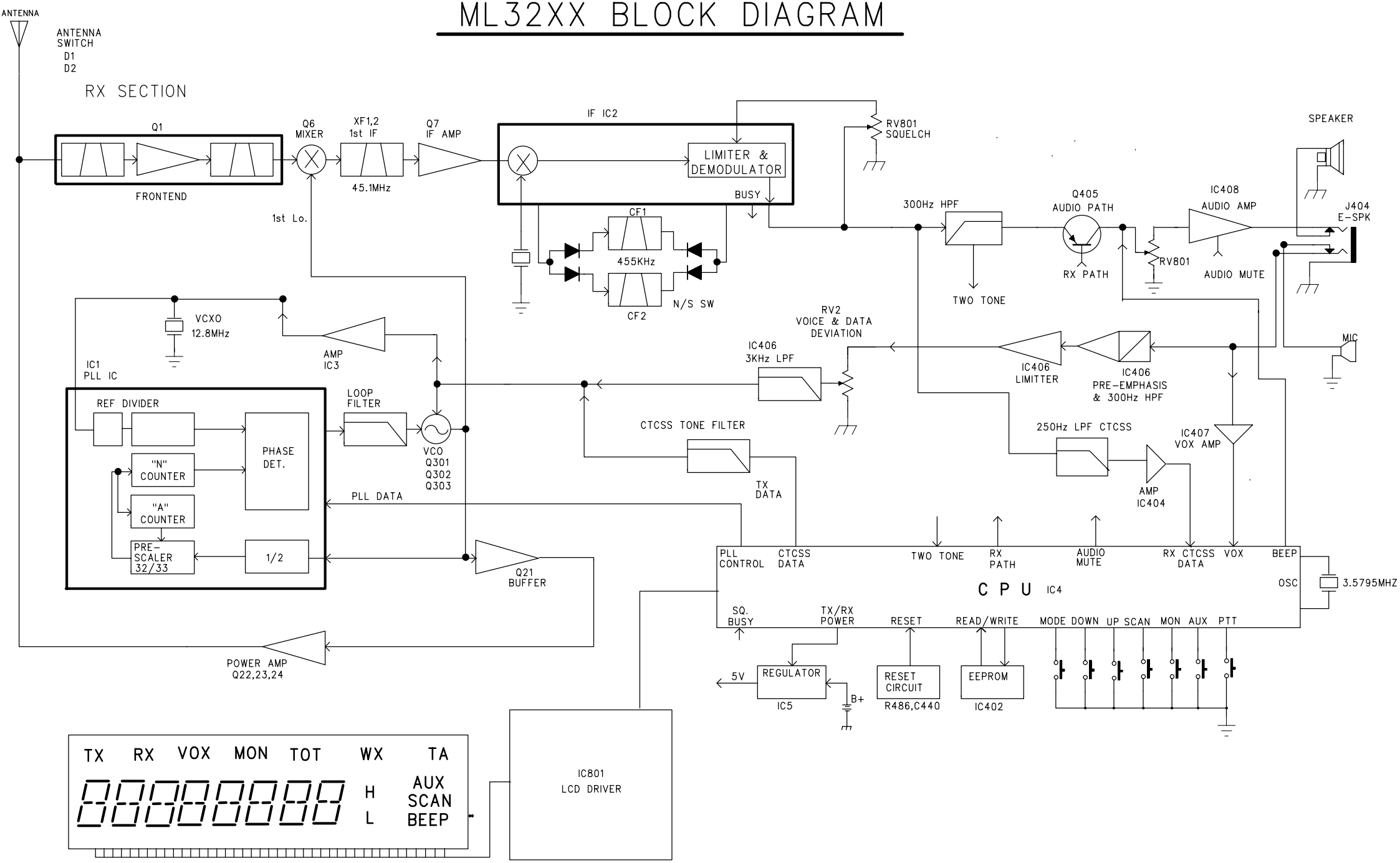ML32XX BLOCK DIAGRAM